VILLAGE OF COBLESKILL
SAMPLE PROJECT
SAMPLE PROJECT

SCHOHARIE COUNTY NEW YORK

FEBRUARY 2012

CONTRACT NO. X - SAMPLE CONTRACT

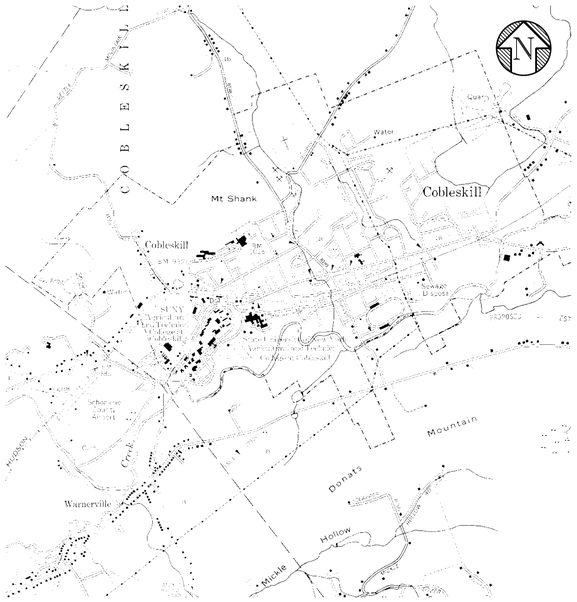

LOCATION MAP
SCALE: 1" = 2000'

MAYOR

VILLAGE BOARD

CLERK/TREASURER

ATTORNEY

WATER SUPERINTENDENT

WASTEWATER SUPERINTENDENT

SHEET NO.	DRAWING INDEX
1	TITLE PAGE, LOCATION MAP AND DRAWING INDEX
2	GENERAL PLAN AND NOTES
3	TRAFFIC CONTROL PLAN
4	WATER MAIN PLAN AND PROFILE
5	SANITARY SEWER MAIN PLAN AND PROFILE
.	.
.	.
.	.
20	SUPPLEMENTAL WATER DETAILS
.	.
.	.
.	.
30	SUPPLEMENTAL SANITARY SEWER DETAILS
31	SUPPLEMENTAL SANITARY SEWER DETAILS
.	.
.	.
.	.
40	DETAILS

LIST OF NYSDOT STANDARD SHEET REFERENCES

663-01	WATER MAIN PIPE INSTALLATION DETAILS
663-02	WATER MAIN HORIZONTAL THRUST RESTRAINT DETAILS
663-03	WATER MAIN THRUST RESTRAINT DETAILS
663-04	WATER MAIN UTILITY CROSSING RELOCATION DETAILS
663-05	WATER MAIN HYDRANT AND VALVE DETAILS
663-06	WATER MAIN HYDRANT FENDER DETAILS
663-07	WATER MAIN SERVICE CONNECTION DETAIL
664-01	SANITARY SEWER MAIN PIPE INSTALLATION DETAILS

ISSUE DATE: XX/XX/XXXX

Village of Cobleskill
378 MINERAL SPRINGS ROAD, SUITE 200
COBLESKILL, NY 12043
(518) 234-3891

Consultant

VILLAGE OF COBLESKILL
SAMPLE PROJECT
SAMPLE PROJECT
SCHOHARIE COUNTY NEW YORK STATE

UNAUTHORIZED ALTERATION AND/OR ADDITION TO THIS DOCUMENT AND/OR UNAUTHORIZED USE OR REUSE OF THIS DOCUMENT ON A PROJECT OTHER THAN THAT INDICATED ON THIS DOCUMENT IS A VIOLATION OF THE NEW YORK STATE EDUCATION LAW AND THE CONTRACT FOR PROFESSIONAL SERVICES AND IS THEREFORE PROHIBITED.

Stamp

Issue Rev.	Date	Remarks

Project Number	#
Drawn By	NAME
Designed By	NAME
Checked By	NAME
Date	DATE
Scale	SCALE
File Name	FILE

Sheet Title

TITLE PAGE
LOCATION MAP
& DRAWING INDEX

Sheet No.

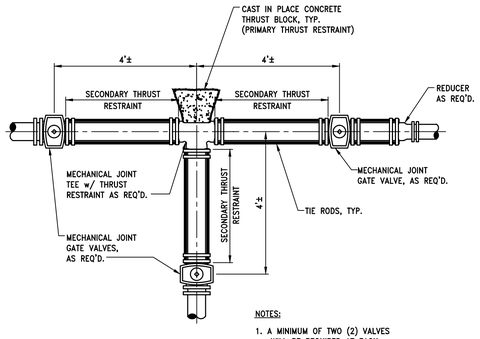

NOTES:

1. A MINIMUM OF TWO (2) VALVES WILL BE REQUIRED AT EACH JUNCTION – SEE PLANS FOR SPECIFIC ORIENTATION AT EACH JUNCTION.
2. DETAIL TYPICAL FOR ALL TEES, CROSSES AND BENDS.

TYPICAL GATE VALVE JUNCTION LAYOUT

SCALE: NONE

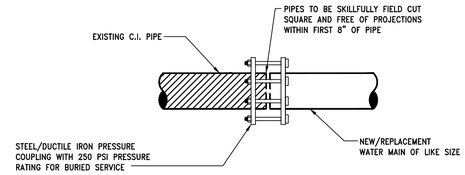

NOTE:

1. TRANSITION GASKET WILL NOT BE CONSIDERED AN ACCEPTABLE ALTERNATIVE TO PRESSURE COUPLINGS.

DETAIL – CONNECTION TO EXISTING WATER SYSTEM

SCALE: NONE

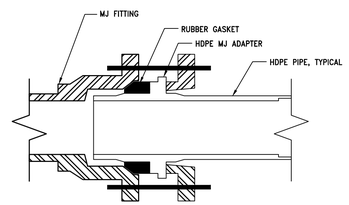

TYPICAL MJ CONNECTION TO HDPE PIPE

SCALE: N.T.S.

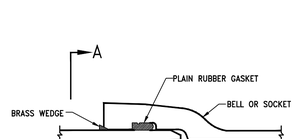

PUSH-ON JOINT (P.J.)

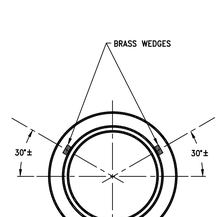

SECTION A

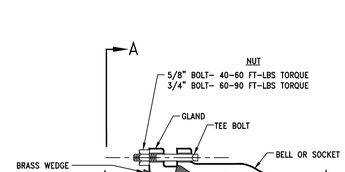

MECHANICAL JOINT (M.J.)

NOTE: 1. BRASS WEDGES NOT NEEDED WHEN RETAINER GLAND USED AT JOINT.

2. BRASS WEDGES NOT NEEDED WITH PVC OR HDPE PIPE.

TYPICAL JOINT CONDUCTIVITY DETAIL

SCALE: NONE

Village of Cobleskill

378 MINERAL SPRINGS ROAD, SUITE 200
COBLESKILL, NY 12043
(518) 234-3891

Consultant

VILLAGE OF COBLESKILL
SAMPLE PROJECT
SAMPLE PROJECT
SCHOHARIE COUNTY NEW YORK STATE

UNAUTHORIZED ALTERATION AND/OR ADDITION TO THIS DOCUMENT AND/OR UNAUTHORIZED USE OR REUSE OF THIS DOCUMENT ON A PROJECT OTHER THAN THAT INDICATED ON THIS DOCUMENT IS A VIOLATION OF THE NEW YORK STATE EDUCATION LAW AND THE CONTRACT FOR PROFESSIONAL SERVICES AND IS THEREFORE PROHIBITED.

Stamp

Issue	Rev.	Date	Remarks

Project Number	#
Drawn By	NAME
Designed By	NAME
Checked By	NAME
Date	DATE
Scale	SCALE
File Name	FILE

Sheet Title

SUPPLEMENTAL WATER DETAILS

Sheet No.

20

TABLE A

OUTLET SEWER PIPE SIZE	"D" DIA. MIN.	"T" WALL THICKNESS MIN.	BUTYL ROPE JOINT SEALER SIZE
8" THRU 24"	4'-0"	5"	1" WIDE
30"	5'-0"	6"	1 1/2" WIDE

TABLE D

ACCEPTABLE MANHOLE STEPS *		
MANUFACTURER	GROUTED IN POCKET STEPS ** PATTERN NO.	CAST IN PLACE STEPS ** PATTERN NO.
ALCOA ALUMINUM	16027 B	12653 A OR B
WASHINGTON ALUM.	F-14-3-MMI-AA	F-14-2 A OR B
M.A. INDUSTRIES	PS2-PF	PS2-PF

* – LOCATE STEPS IN LINE OVER WIDEST PORTION OF BENCHWALL
** – EMBEDDED 4" INTO WALL. COAT EMBEDDED PORTION PLUS 1" (5" MIN.) WITH ASPHALT.

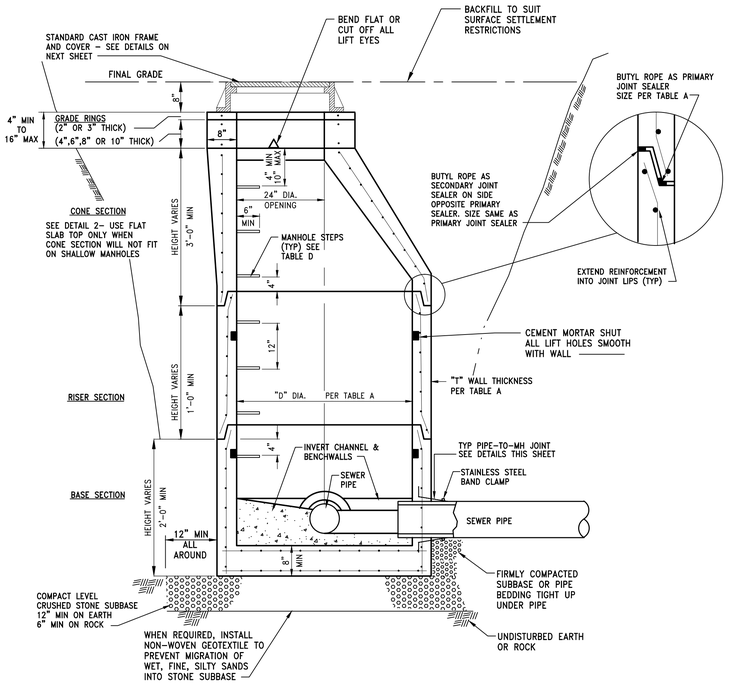

1/30 PRECAST CONCRETE MANHOLE DETAIL
SCALE: NOT TO SCALE

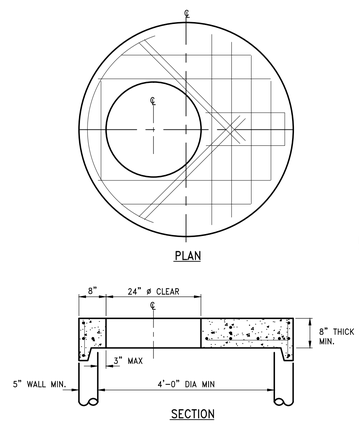

2/30 FLAT SLAB TOP DETAIL
SCALE: NOT TO SCALE

NOTES:
1. USE ONLY WHEN CONE SECTION WILL NOT FIT ON SHALLOW MANHOLES

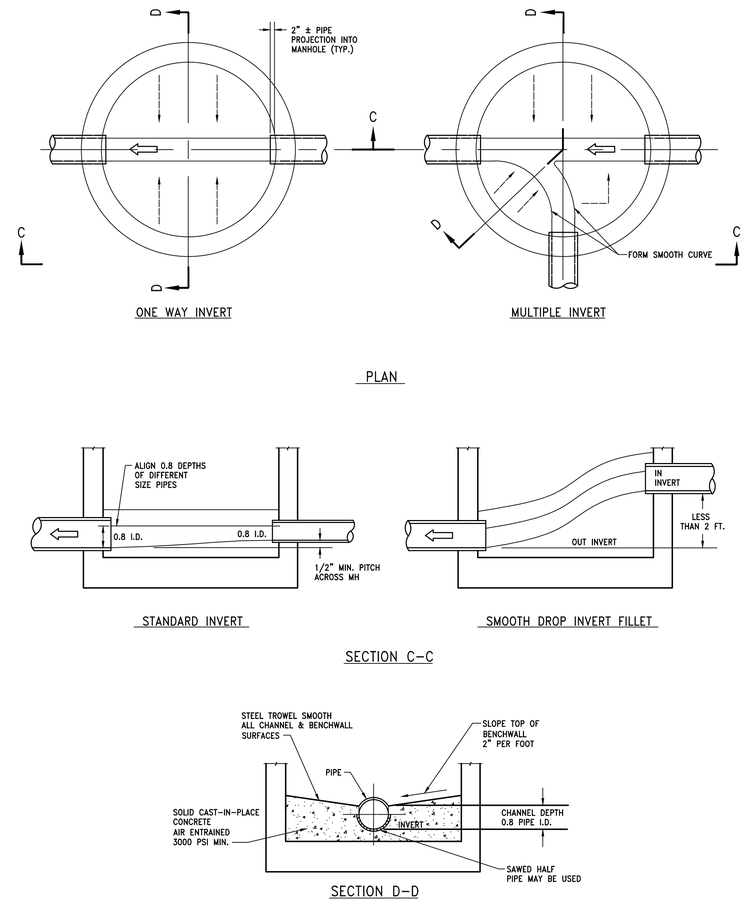

3/30 INVERT, CHANNEL, & BENCHWALLS
SCALE: N.T.S.

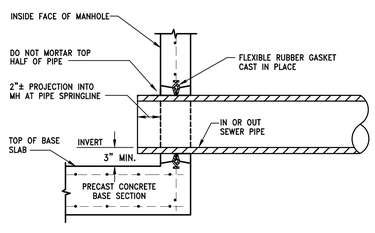

TYPE A

4/30 FLEXIBLE PIPE-TO-MH JOINT DETAIL
SCALE: NOT TO SCALE

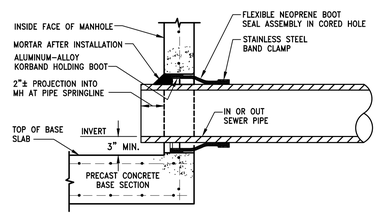

TYPE B

5/30 FLEXIBLE PIPE-TO-MH JOINT DETAIL
SCALE: NOT TO SCALE

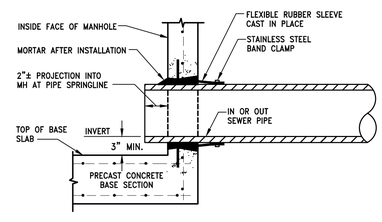

TYPE C

6/30 FLEXIBLE PIPE-TO-MH JOINT DETAIL
SCALE: NOT TO SCALE

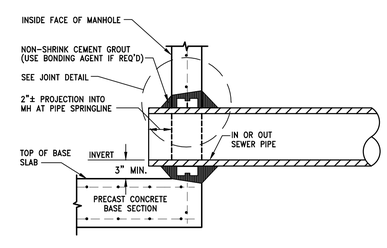

TYPE C

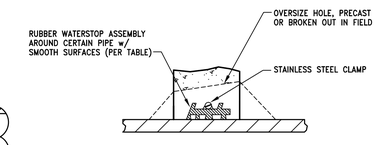

JOINT DETAIL

NOTE:
USE AT NO EXTRA COST IN PLACE OF ANY FLEXIBLE PIPE-TO-MH JOINT ONLY WHEN:
- CONNECTING TO EXISTING MH's THAT HAVE NO FLEXIBLE PIPE-TO-MH JOINT PROVIDED
- REQUIRED BY FIELD CHANGES

7/30 CEMENT GROUT SEAL PIPE-TO-MH JOINT DETAIL
SCALE: NOT TO SCALE

Village of Cobleskill
378 MINERAL SPRINGS ROAD, SUITE 200
COBLESKILL, NY 12043
(518) 234-3891

Consultant

VILLAGE OF COBLESKILL
SAMPLE PROJECT
SAMPLE PROJECT
SCHOHARIE COUNTY NEW YORK STATE

UNAUTHORIZED ALTERATION AND/OR ADDITION TO THIS DOCUMENT AND/OR UNAUTHORIZED USE OR REUSE OF THIS DOCUMENT ON A PROJECT OTHER THAN THAT INDICATED ON THIS DOCUMENT IS A VIOLATION OF THE NEW YORK STATE EDUCATION LAW AND THE CONTRACT FOR PROFESSIONAL SERVICES AND IS THEREFORE PROHIBITED.

Stamp

Issue Rev.	Date	Remarks

Project Number	#
Drawn By	NAME
Designed By	NAME
Checked By	NAME
Date	DATE
Scale	SCALE
File Name	FILE

Sheet Title
SUPPLEMENTAL SANITARY SEWER DETAILS

Sheet No.
30

ACCEPTABLE MANHOLE FRAMES AND COVERS

MANUFACTURER	PATTERN NUMBER	ALL DIMENSIONS ARE IN INCHES "A"	"B"	"C"	"D"	"E"	"F"	"G"	"H"	APPROX. WT. (LBS) COVER	FRAME
CAMPBELL FOUNDRY	1009	27 7/8	26	25 3/4	24	27	34 1/2	1 3/8	8	160	220
SYRACUSE CASTING	SC1009										

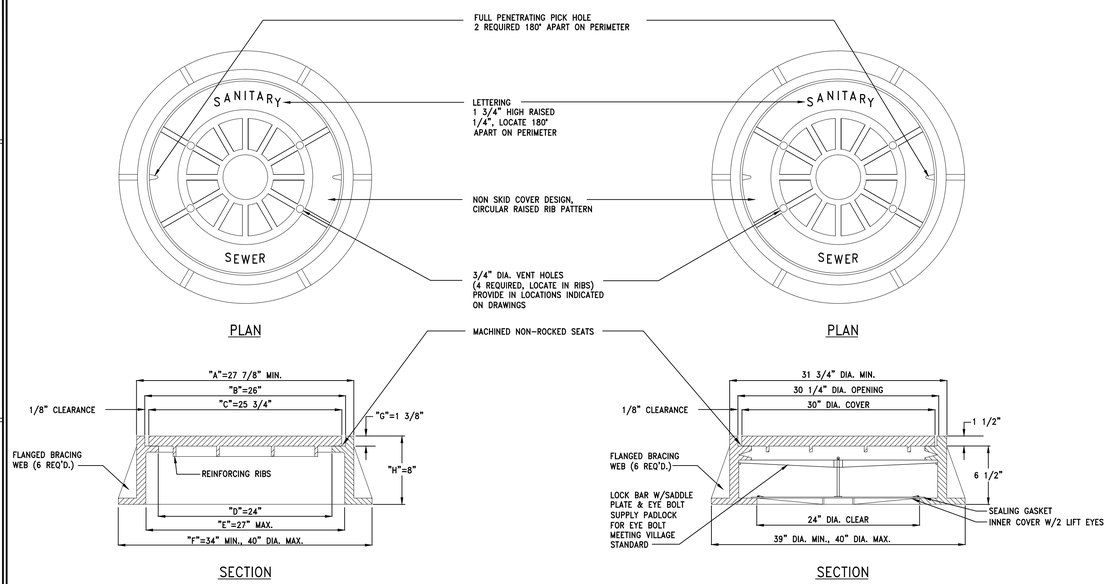

1/31 STANDARD CAST IRON MH COVER DETAIL
SCALE: NOT TO SCALE

2/31 WATERTIGHT CAST IRON MH COVER DETAIL
SCALE: NOT TO SCALE (USE ONLY WHEN SPECIFIED)

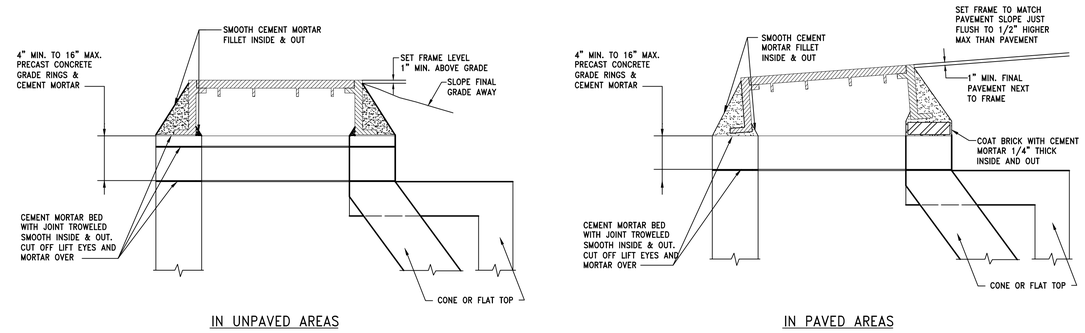

3/31 CAST IRON MH COVER INSTALLATION DETAIL
SCALE: NOT TO SCALE

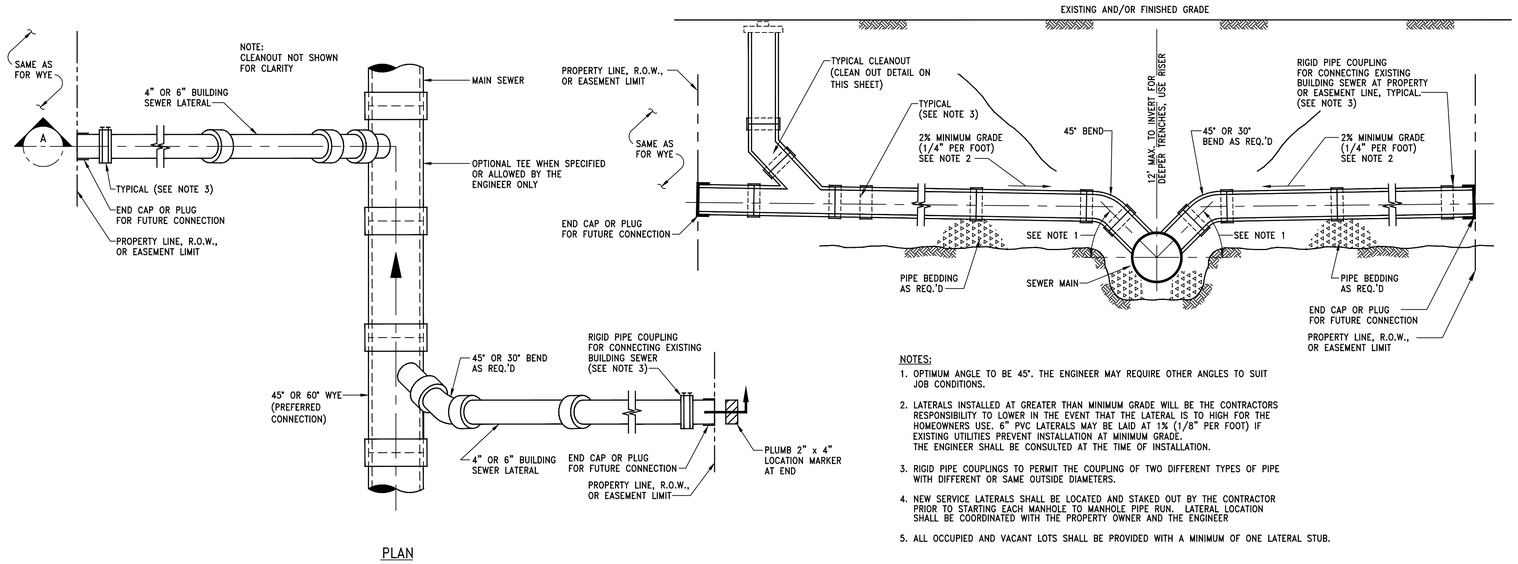

NOTES:

1. OPTIMUM ANGLE TO BE 45°. THE ENGINEER MAY REQUIRE OTHER ANGLES TO SUIT JOB CONDITIONS.
2. LATERALS INSTALLED AT GREATER THAN MINIMUM GRADE WILL BE THE CONTRACTORS RESPONSIBILITY TO LOWER IN THE EVENT THAT THE LATERAL IS TO HIGH FOR THE HOMEOWNERS USE. 6" PVC LATERALS MAY BE LAID AT 1% (1/8" PER FOOT) IF EXISTING UTILITIES PREVENT INSTALLATION AT MINIMUM GRADE. THE ENGINEER SHALL BE CONSULTED AT THE TIME OF INSTALLATION.
3. RIGID PIPE COUPLINGS TO PERMIT THE COUPLING OF TWO DIFFERENT TYPES OF PIPE WITH DIFFERENT OR SAME OUTSIDE DIAMETERS.
4. NEW SERVICE LATERALS SHALL BE LOCATED AND STAKED OUT BY THE CONTRACTOR PRIOR TO STARTING EACH MANHOLE TO MANHOLE PIPE RUN. LATERAL LOCATION SHALL BE COORDINATED WITH THE PROPERTY OWNER AND THE ENGINEER
5. ALL OCCUPIED AND VACANT LOTS SHALL BE PROVIDED WITH A MINIMUM OF ONE LATERAL STUB.

4/31 STANDARD SEWER SERVICE CONNECTION DETAIL
SCALE: N.T.S.

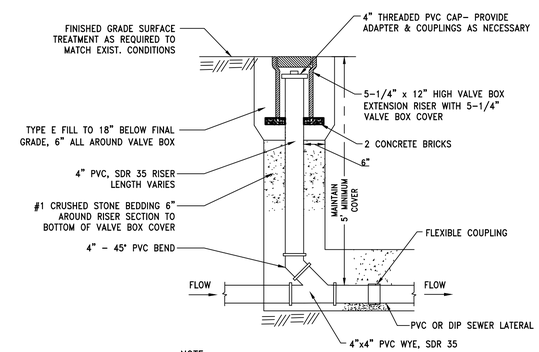

NOTE:

1. VALVE BOX COVERS SHALL HAVE SEWER DESIGNATION
2. USE FLEXIBLE COUPLING TO TRANSITION FROM DIP TO PVC
3. 6" SEWER LATERAL WILL REQUIRE A 4"x6" PVC WYE, SDR 35

5/30 TYPICAL CLEANOUT DETAIL
SCALE: N.T.S.

Village of Cobleskill
378 MINERAL SPRINGS ROAD, SUITE 200
COBLESKILL, NY 12043
(518) 234-3891

Consultant

VILLAGE OF COBLESKILL
SAMPLE PROJECT
SAMPLE PROJECT
SCHOHARIE COUNTY NEW YORK STATE

UNAUTHORIZED ALTERATION AND/OR ADDITION TO THIS DOCUMENT AND/OR UNAUTHORIZED USE OR REUSE OF THIS DOCUMENT ON A PROJECT OTHER THAN THAT INDICATED ON THIS DOCUMENT IS A VIOLATION OF THE NEW YORK STATE EDUCATION LAW AND THE CONTRACT FOR PROFESSIONAL SERVICES AND IS THEREFORE PROHIBITED.

Stamp

Issue Rev.	Date	Remarks

Project Number	#
Drawn By	NAME
Designed By	NAME
Checked By	NAME
Date	DATE
Scale	SCALE
File Name	FILE

Sheet Title
SUPPLEMENTAL SANITARY SEWER DETAILS

Sheet No.
31

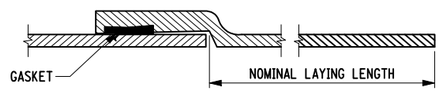

PUSH-ON JOINT FOR
DUCTILE IRON PIPE AND FITTINGS
NOTE: WILL VARY WITH SIZE AND MANUFACTURER

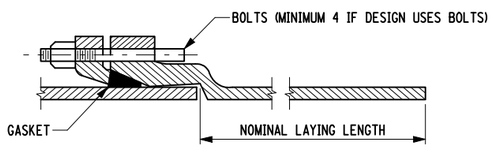

MECHANICAL JOINT (NON-RESTRAINED) FOR
DUCTILE IRON PIPE AND FITTINGS
NOTE: WILL VARY WITH SIZE AND MANUFACTURER

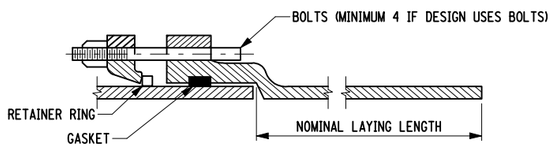

RESTRAINED MECHANICAL JOINT FOR
DUCTILE IRON PIPE AND FITTINGS
NOTE: WILL VARY WITH SIZE AND MANUFACTURER

MECHANICAL JOINT BOLT TORQUE		
NPS SIZE	BOLT SIZE	TORQUE (LBF/FT)
3	5/8"	45-60
4-24	3/4"	75-90
30-36	1"	100-120
42-48	1 1/4"	120-150

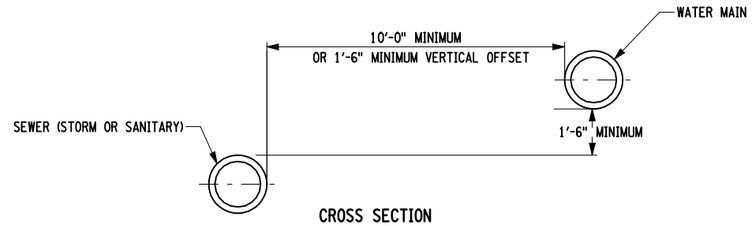

CROSS SECTION

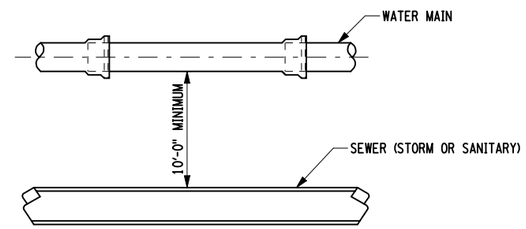

PLAN
WATER MAIN/SEWER
PARALLEL INSTALLATION

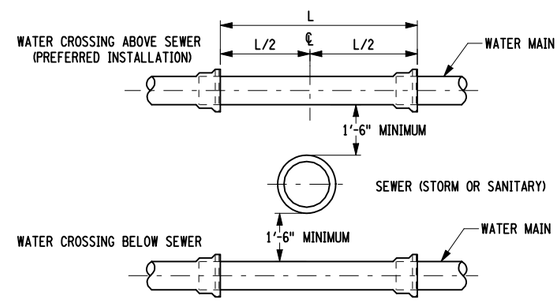

ELEVATION
WATER MAIN/SEWER
CROSSING

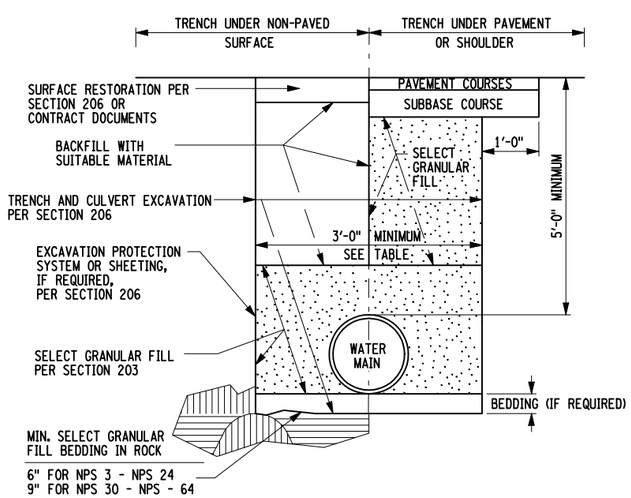

NEW OR RELOCATED
DUCTILE IRON OR STEEL WATER MAIN
TRENCH DETAIL

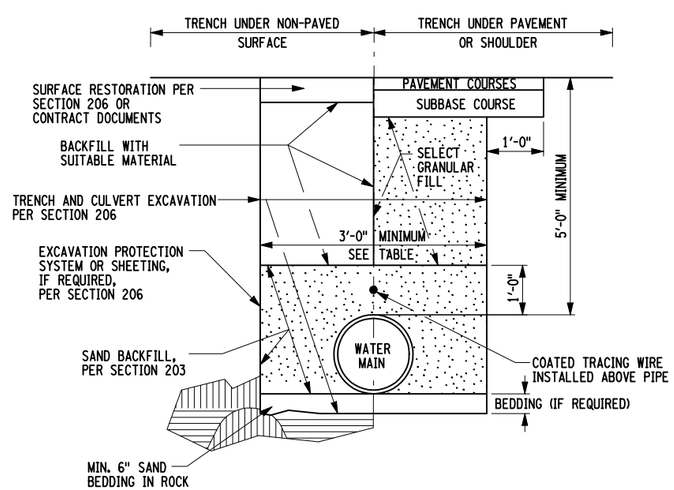

NEW OR RELOCATED
PLASTIC WATER MAIN
TRENCH DETAIL

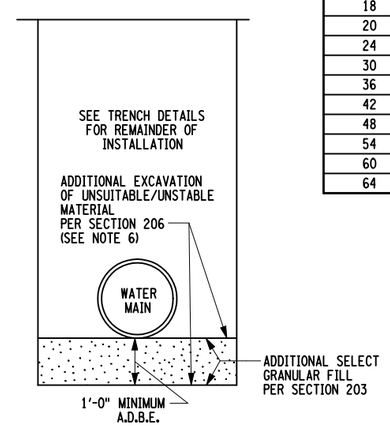

WATER MAIN INSTALLATION IN
UNSTABLE OR UNSUITABLE SOIL CONDITIONS

NOTES:

1. SEE SPECIAL NOTES ENTITLED "OWNER REQUIREMENTS FOR WATER MAINS AND APPURTENANCES" FOR INFORMATION ON ADDITIONAL REQUIREMENTS.
2. IT IS THE CONTRACTOR'S RESPOSIBILITY TO DETERMINE THE EXACT LOCATIONS OF EXISTING UTILITIES. THE CONTRACTOR SHALL VERIFY ELEVATIONS OF EXISTING UTILITIES TO ENSURE ADEQUATE CLEARANCE FOR THE WATER LINE EXISTS. THE CONTRACTOR SHALL NOIFY THE ENGINEER (IN WRITING) OF CONFLICTING ELEVATIONS, ALLOWING THE ENGINEER ADEQUATE TIME TO REVISE GRADES WITHOUT NECESSITATING REMOVAL AND RECONSTRUCTION OF WORK ALREADY COMPLETED BY THE CONTRACTOR.
3. DETAILS SHOWN ON THIS SHEET ARE BASED UPON TYPE 4 LAYING CONDITION DESCRIBED IN AWWA STANDARD C600. SELECT GRANULAR FILL AND SAND BACKFILL ARE ASSUMED TO HAVE A FRICION ANGLE OF 30° AND A UNIT WEIGHT OF 90 LBS./CUBIC FEET.
4. THE TOP PAYMENT LINE FOR TRENCH EXCAVATION SHALL BE PER SECTION 206.
5. BEDDING BELOW THE PIPE INVERT SHALL BE REQUIRED ONLY WHEN NOTED IN THE OWNER REQUIREMENTS OR WHEN ROCK OR UNSTABLE OR UNSUITABLE CONDITIONS ARE ENCOUNTERED.
6. IF UNSTABLE OR UNSUITABLE SOIL CONDITIONS ARE ENCOUNTERED NEAR THE INVERT ELEVATION, A MINIMUM OF 1' AND A MAXIMUM OF 2' OF MATERIAL SHALL BE EXCAVATED A.D.B.E. AND REPLACED WITH SELECT GRANULAR FILL. ADDITIONAL PAYMENT WILL BE MADE FOR MATERIAL PLACED TO TREAT UNSTABLE OR UNSUITABLE CONDITIONS.
7. NEW WATER MAINS INSTALLED PARALLEL TO STORM AND/OR SANITARY SEWER CONDUITS SHALL HAVE A MINIMUM OF 10' HORIZONTAL SEPERATION (MEASURED EDGE OF PIPE TO EDGE OF PIPE) WHENEVER POSSIBLE. WHEN 10' HORIZONTAL SEPERATION CANNOT BE MAINTAINED A VERTICAL SEPERATION OF AT LEAST 1'-6" BETWEEN BOTTOM OF WATER MAIN AND TOP OF SEWER PIPE SHALL BE MAINTAINED. IF NEITHER SEPERATION CAN BE MAINTAINED, THE WATER AND SEWER SHALL BE CONSTUCTED AS SHOWN ON THE CONTRACT PLANS AND APPROVED BY THE APPROPRIATE HEALTH AGENCY.
8. BACKFILL SHALL BE INSTALLED AND COMPACTED IN ACCORDANCE WITH THE REQUIREMENTS OF §203-3.15.
9. UPON COMPLETION OF ALL WATER SUPPLY RELATED CONSTRUCTION, INCLUDING BACKFILL, HYDROSTATIC TESTING SHALL BE PERFORMED IN ACCORDANCE WITH AWWA STANDARD C600 WITH THE MAINS THOROUGHLY FLUSHED PROIR TO TESTING. UNLESS OTHERWISE NOTED, THE SYSTEM SHALL BE SUBJECTED TO A PRESSURE/LEAKAGE TEST WITH WATER UNDER A MINIMUM HYDROSTATIC PRESSURE OF 150 PSI FOR A MINIMUM OF TWO (2) HOURS.
10. UPON COMPLETION OF ALL WATER SUPPLY RELATED CONSTRUCTION, ALL MAINS, VALVES, HYDRANTS, AND OTHER APPURTENANCES BUILT UNDER THIS CONTRACT SHALL BE DISINFECTED, FLUSHED, AND TESTED FOR BACTERIALOGICAL QUALITY IN ACCORDANCE WITH AWWA STANDARD C651. THE TABLET METHOD SHALL NOT BE USED FOR CHLORINATION OF SOLVENT WELDED PLASTIC OR SCREWED-JOINT STEEL PIPE DUE TO THE DANGER OF FIRE OR EXPLOSION FROM THE REACTION OF JOINT COMPOUNDS WITH CALCIUM HYPOCHLORITE.

MAXIMUM JOINT DEFLECTION			
NPS SIZE	PUSH-ON JOINTS		MJ JOINTS
	18' DI	20' DI	18/20 FT.
3	5°	5°	8°
4	5°	5°	8°
6	5°	5°	7°
8	5°	5°	5°
10	5°	5°	5°
12	5°	5°	5°
14	3°	3°	3.5°
16	3°	3°	3.5°
18	3°	3°	3°
20	3°	3°	3°
24	3°	3°	2°
30	3°	3°	N/A
36	3°	3°	N/A
42	3°	3°	N/A
48	N/A	3°	N/A
54	N/A	3°	N/A
60	N/A	3°	N/A
64	N/A	3°	N/A

EXCAVATION PAYMENT WIDTHS	
NPS SIZE	TRENCH WIDTH
3	3'-0"
4	3'-0"
6	3'-0"
8	3'-0"
10	3'-0"
12	3'-0"
14	3'-6"
16	3'-6"
18	3'-6"
20	4'-0"
24	4'-0"
30	4'-6"
36	5'-0"
42	5'-6"
48	6'-0"
54	6'-6"
60	7'-0"
64	7'-6"

STATE OF NEW YORK
DEPARTMENT OF TRANSPORTATION

U.S. CUSTOMARY STANDARD SHEET

WATER MAIN PIPE
INSTALLATION DETAILS

APPROVED MAY 05, 2010
/S/ RICHARD W. LEE, P.E.
DEPUTY CHIEF ENGINEER
(DESIGN)

ISSUED UNDER EB 10-011
663-01

EFFECTIVE DATE: 01/06/11

FILE NAME = 663-01_010611.dgn
DATE/TIME = 11-MAY-2010 08:56
USER = jkurley

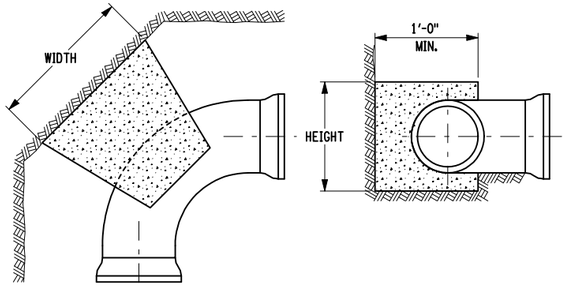

PLAN VIEW END VIEW

90° BEND THRUST BLOCK DIMENSIONING					
PIPE SIZE	WIDTH (FT-IN)	HEIGHT (FT-IN)	PIPE SIZE	WIDTH (FT-IN)	HEIGHT (FT-IN)
4 NPS	2'-3"	1'-3"	14 NPS	7'-3"	3'-6"
6 NPS	3'-3"	1'-9"	16 NPS	8'-3"	4'-0"
8 NPS	4'-3"	2'-3"	18 NPS	9'-3"	4'-6"
10 NPS	5'-3"	2'-6"	20 NPS	10'-6"	5'-0"
12 NPS	6'-0"	3'-3"	24 NPS	12'-6"	6'-0"

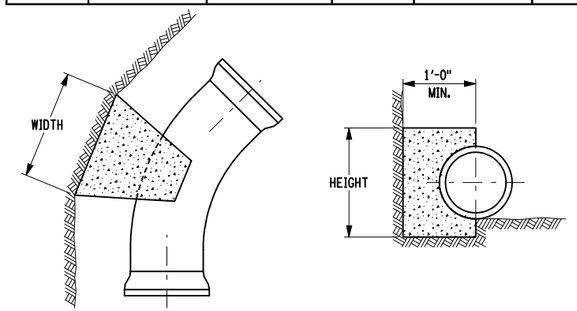

PLAN VIEW END VIEW

45° BEND THRUST BLOCK DIMENSIONING					
PIPE SIZE	WIDTH (FT-IN)	HEIGHT (FT-IN)	PIPE SIZE	WIDTH (FT-IN)	HEIGHT (FT-IN)
4 NPS	2'-0"	0'-9"	14 NPS	5'-3"	2'-6"
6 NPS	2'-6"	1'-3"	16 NPS	5'-6"	3'-3"
8 NPS	3'-3"	1'-9"	18 NPS	7'-3"	3'-3"
10 NPS	4'-0"	2'-0"	20 NPS	7'-3"	4'-0"
12 NPS	4'-6"	2'-3"	24 NPS	8'-9"	4'-6"

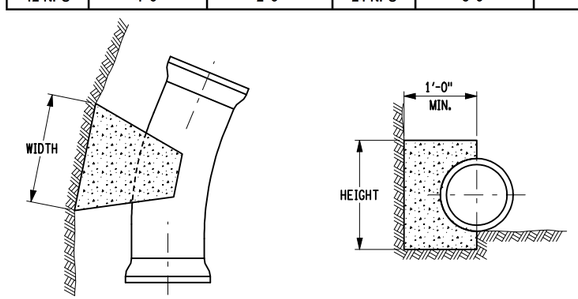

PLAN VIEW END VIEW

22½° BEND THRUST BLOCK DIMENSIONING					
PIPE SIZE	WIDTH (FT-IN)	HEIGHT (FT-IN)	PIPE SIZE	WIDTH (FT-IN)	HEIGHT (FT-IN)
4 NPS	1'-3"	0'-9"	14 NPS	3'-6"	2'-0"
6 NPS	2'-0"	0'-9"	16 NPS	4'-6"	2'-3"
8 NPS	2'-3"	1'-3"	18 NPS	5'-0"	2'-6"
10 NPS	3'-0"	1'-3"	20 NPS	5'-0"	3'-0"
12 NPS	3'-3"	1'-9"	24 NPS	6'-3"	3'-3"

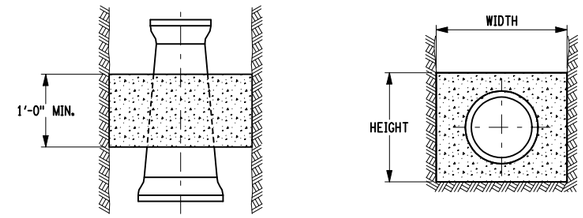

PLAN VIEW END VIEW

REDUCER THRUST BLOCK DIMENSIONING					
SIZE	WIDTH (FT-IN)	HEIGHT (FT-IN)	SIZE	WIDTH (FT-IN)	HEIGHT (FT-IN)
6x4 NPS	1'-6"	1'-6"	16x8 NPS	4'-6"	4'-6"
8x4 NPS	2'-3"	2'-3"	16x10 NPS	4'-0"	4'-0"
8x6 NPS	1'-9"	1'-9"	16x12 NPS	3'-6"	3'-6"
10x6 NPS	2'-6"	2'-6"	20x12 NPS	5'-0"	5'-0"
10x8 NPS	2'-0"	2'-0"	20x16 NPS	4'-0"	4'-0"
12x6 NPS	3'-3"	3'-3"	24x12 NPS	6'-6"	6'-6"
12x8 NPS	3'-0"	3'-0"	24x16 NPS	5'-9"	5'-9"
12x10 NPS	2'-3"	2'-3"	24x20 NPS	4'-6"	4'-6"

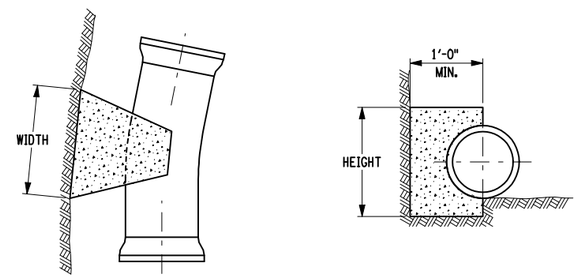

PLAN VIEW END VIEW

11¼° BEND THRUST BLOCK DIMENSIONING					
PIPE SIZE	WIDTH (FT-IN)	HEIGHT (FT-IN)	PIPE SIZE	WIDTH (FT-IN)	HEIGHT (FT-IN)
4 NPS	1'-0"	0'-6"	14 NPS	3'-0"	1'-3"
6 NPS	1'-3"	0'-9"	16 NPS	3'-3"	1'-9"
8 NPS	1'-9"	0'-9"	18 NPS	3'-6"	1'-9"
10 NPS	2'-0"	1'-0"	20 NPS	3'-6"	2'-0"
12 NPS	2'-3"	1'-3"	24 NPS	4'-6"	2'-3"

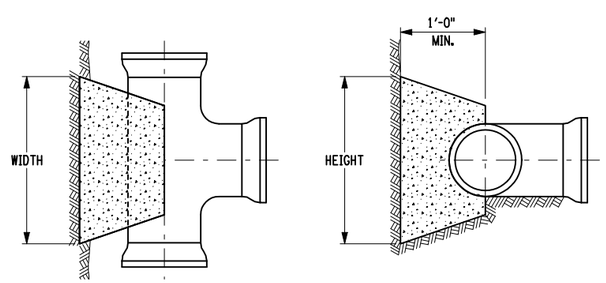

PLAN VIEW END VIEW

TEE/DEAD END THRUST BLOCK DIMENSIONING					
PIPE SIZE	WIDTH (FT-IN)	HEIGHT (FT-IN)	PIPE SIZE	WIDTH (FT-IN)	HEIGHT (FT-IN)
4 NPS	2'-0"	1'-0"	14 NPS	5'-6"	3'-3"
6 NPS	3'-0"	1'-3"	16 NPS	6'-6"	3'-6"
8 NPS	3'-3"	2'-0"	18 NPS	7'-6"	4'-0"
10 NPS	4'-3"	2'-3"	20 NPS	8'-6"	4'-3"
12 NPS	5'-3"	2'-6"	24 NPS	10'-3"	5'-3"

NOTES:

1. SEE SPECIAL NOTES ENTITLED "OWNER REQUIREMENTS FOR WATER MAINS AND APPURTENANCES" FOR ADDITIONAL INFORMATION ON THRUST RESTRAINT REQUIREMENTS.
2. THRUST RESTRAINT USING THRUST BLOCKS AND TIE RODS ARE SHOWN ON THESE SHEETS. RESTRAINED JOINTS AND RETAINER GLANDS ARE ALSO ACCEPTABLE METHODS. THE THRUST RESTRAINT METHOD SHALL BE AS REQUIRED BY THE SYSTEM OWNER.
3. IF THE OWNER OF THE WATER SYSTEM REQUIRES A METHOD THAT RESTRAINS INDIVIDUAL JOINTS, EACH JOINT THAT FALLS WITHIN THE MINIMUM RESTRAINED LENGTH, MEASURED FROM THE CENTER OF THE FITTING, AS SHOWN ON THESE SHEETS SHALL BE RESTRAINED, AND SHALL WITHSTAND THE MAXIMUM PRESSURE APPLIED TO THE SYSTEM.
4. CLASS A CONCRETE SHALL NOT BE PLACED UNDER WATER. THE CONTRACTOR SHALL DEWATER THE EXCAVATION OR PLACE TYPE G CONCRETE USING APPROPRIATE UNDERWATER PLACEMENT TECHNIQUES.
5. CONCRETE FOR THRUST BLOCKS SHALL NOT BE ALLOWED TO COVER OR INTERFERE WITH JOINT OR RESTRAINT HARDWARE. PLASTIC SHEETING OR BUILDING FELT MAY BE PLACED OVER PIPE OR FITTINGS TO PREVENT CONCRETE FROM ADHERING TO SURFACES. CONCRETE FOR THRUST BLOCKS SHALL BE POURED AGAINST UNDISTURBED SOIL.
6. FOR BENDS, BEARING AREA SHALL BE PARALLEL TO THE EDGE OF THE FITTING AT THE FITTING MIDPOINT.
7. FOR TEES, BEARING AREA SHALL BE PERPENDICULAR TO THE BRANCH (SINGLE LEG) AXIS.
8. FOR REDUCERS, BEARING AREA SHALL BE PERPENDICULAR TO THE FITTING AXIS. THE MINIMUM THICKNESS ALONG THE FITTING AXIS SHALL BE 1'-0" OR THE LENGTH BETWEEN THE BELLS, WHICHEVER IS SMALLER.
9. THRUST RESTRAINTS FOR SIZES OVER 24 NPS OR FOR FITTINGS NOT SHOWN ON THESE SHEETS WILL BE DESIGNED ON A CASE BY CASE BASIS, AND WILL BE SHOWN IN THE CONTRACT DOCUMENTS.
10. THRUST BLOCK SIZES AND MINIMUM RESTRAINED LENGTHS SHOWN ON THESE SHEETS ARE BASED UPON THE FOLLOWING STANDARD CONDITIONS:
    1.5 - SAFETY FACTOR
    5'-0" - DEPTH OF COVER
    200 PSI - WATER SYSTEM TEST PRESSURE
    14 PSI - SOIL BEARING CAPACITY
    90 LB/CF - SOIL UNIT WEIGHT
11. TO DETERMINE REQUIRED SIZES FOR DIFFERENT CONDITIONS, MULTIPLY THE DIMENSION BY A FACTOR OF THE SPECIFIC VALUE DIVIDED BY THE STANDARD VALUE.

    EXAMPLE:

    FOR 12 NPS 45° BEND WITH 100 PSI TEST PRESSURE:

    AREA REQUIRED = (4'-6" x 2'-3") x (100 PSI / 200 PSI) = 5.06 SF
    WIDTH = 3'-6"
    HEIGHT = 1'-6"

MINIMUM RESTRAINED LENGTH OF PIPE (FT-IN) L_R										
FITTING	4 NPS	6 NPS	8 NPS	10 NPS	12 NPS	14 NPS	16 NPS	18 NPS	20 NPS	24 NPS
11¼° BEND	1'-3"	2'-0"	2'-6"	3'-0"	3'-6"	4'-0"	4'-6"	5'-0"	5'-6"	6'-3"
22½° BEND	1'-3"	2'-0"	2'-6"	3'-0"	3'-6"	4'-0"	4'-6"	5'-0"	5'-6"	6'-6"
45° BEND	3'-0"	4'-0"	5'-3"	6'-3"	7'-6"	8'-6"	9'-6"	10'-6"	11'-6"	13'-6"
90° BEND	7'-0"	9'-9"	12'-6"	15'-6"	18'-0"	20'-0"	23'-0"	25'-6"	28'-0"	32'-6"
DEAD END	8'-6"	12'-6"	16'-0"	19'-3"	23'-0"	26'-0"	29'-6"	33'-0"	36'-0"	42'-0"
* DIMENSIONS ARE IN FT-IN FORMAT.										
* FOR POLYETHYLENE WRAPPED PIPE, MULTIPLY VALUES IN TABLE BY 1.45										

STATE OF NEW YORK
DEPARTMENT OF TRANSPORTATION

U.S. CUSTOMARY STANDARD SHEET

WATER MAIN
HORIZONTAL THRUST RESTRAINT DETAILS

APPROVED SEPTEMBER 19, 2008
/S/ DANIEL D'ANGELO, P.E.
DEPUTY CHIEF ENGINEER (DESIGN)

ISSUED UNDER EB 08-036

663-02

EFFECTIVE DATE: 01/08/09

FILE NAME = IP_PWRd0109553\663-02.dgn
DATE/TIME = 06-NOV-2008 15:05
USER = jturley

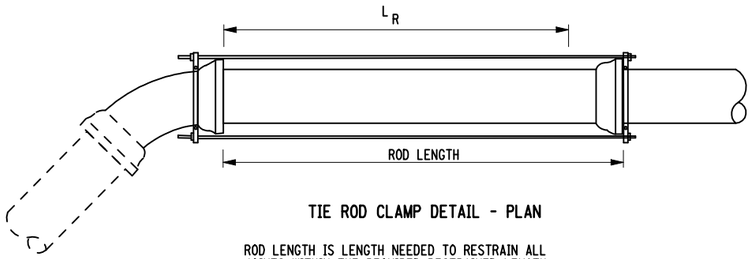

TIE ROD CLAMP DETAIL - PLAN

ROD LENGTH IS LENGTH NEEDED TO RESTRAIN ALL JOINTS WITHIN THE REQUIRED RESTRAINED LENGTH L_R

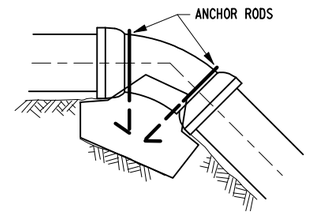

VERTICAL BEND GRAVITY BLOCK - ELEVATION

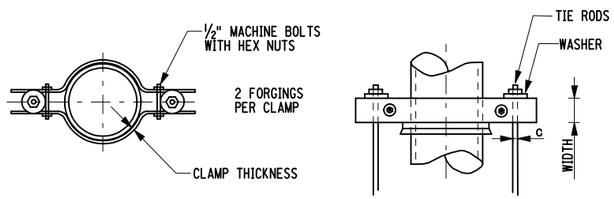

CROSS SECTION PLAN

TIE ROD CLAMP DETAIL

MINIMUM GRAVITY BLOCK VOLUMES FOR VERTICAL BENDS (Z)										
FITTING	PIPE SIZE									
	4 NPS	6 NPS	8 NPS	10 NPS	12 NPS	14 NPS	16 NPS	18 NPS	20 NPS	24 NPS
11 1/4°	4"	11 13/16"	1'-7 11/16"	2'-3 9/16"	3'-3 3/8"	4'-3 3/16"	5'-7"	6'-10 11/16"	8'-6 3/8"	12'-1 11/16"
22 1/2°	11 13/16"	1'-7 11/16"	2'-11 7/16"	4'-7 1/8"	6'-3"	8'-6 3/8"	11'-1 7/8"	13'-9 3/8"	17'-3/4"	24'-3 11/32"
45°	1'-7 11/16"	3'-3 3/8"	5'-10 7/8"	8'-10 5/16"	12'-5 5/8"	16'-8 13/16"	21'-7 27/32"	27'-2 3/4"	33'-5 9/16"	47'-6 7/8"
90°	2'-11 7/16"	6'-3"	10'-9 15/16"	16'-4 27/32"	22'-11 37/64"	30'-10 3/4"	40'-5/16"	50'-2 3/8"	61'-8 5/32"	88'-3 1/16"

ANCHOR ROD SCHEDULE FOR GRAVITY BLOCKS		
PIPE SIZE	RODS	MIN. EMBEDMENT LENGTH
4 NPS	1 - #10 (3)	6"
6 NPS	1 - #10 (3)	6"
8 NPS	2 - #13 (4)	6"
10 NPS	2 - #13 (4)	6"
12 NPS	2 - #16 (5)	7"
14 NPS	2 - #19 (6)	8"
16 NPS	2 - #19 (6)	8"
18 NPS	2 - #22 (7)	10"
20 NPS	2 - #25 (8)	11"
24 NPS	2 - #29 (9)	12"

NUMBERS IN PARENTHESIS ARE BAR SIZES MARKED IN EIGHTHS OF INCHES

TIE RODS AND CLAMPS				
PIPE SIZE	ROD SIZE		CLAMP SIZE	
	RECOMENDED DIA.	MIN. AREA (IN^2)	THICKNESS	WIDTH
4 NPS	2 - 13/16"	3/4	1/2"	1"
6 NPS	2 - 13/16"	3/4	1/2"	1"
8 NPS	2 - 1"	1 1/4	1/2"	1"
10 NPS	2 - 1 1/8"	1 7/8	1/2"	1"
12 NPS	2 - 1 3/8"	2	1/2"	1"
14 NPS	2 - 1 3/8"	2	1/2"	1"
16 NPS	4 - 1 3/8"	5 7/8	SEE NOTE 10	
18 NPS	4 - 1 3/8"	5 7/8	SEE NOTE 10	
20 NPS	4 - 1 1/2"	10 1/4	SEE NOTE 10	
24 NPS	4 - 1 1/2"	10 1/4	SEE NOTE 10	

MINIMUM RESTRAINED LENGTH OF PIPE (L_R)										
	4 NPS	6 NPS	8 NPS	10 NPS	12 NPS	14 NPS	16 NPS	18 NPS	20 NPS	24 NPS
VERTICAL UPWARD BENDS										
11 1/4°	1'-3 5/8"	2'-0"	2'-7 3/16"	3'-0"	3'-7 3/16"	3'-10 13/16"	4'-7 3/16"	4'-10 13/16"	5'-7 3/16"	6'-2 3/8"
22 1/2°	1'-3 5/8"	2'-0"	2'-7 3/16"	3'-0"	3'-7 3/16"	3'-10 13/16"	4'-7 3/16"	4'-10 13/16"	5'-7 3/16"	6'-2 3/8"
45°	3'-0"	3'-8 5/16"	5'-3"	6'-3"	7'-6"	8'-6"	9'-6"	10'-6"	11'-6"	13'-4 7/8"
90°	6'-10 13/16"	9'-9 5/8"	12'-6"	15'-4 13/16"	18'-0"	20'-4 13/16"	23'-0"	25'-7 3/16"	27'-10 7/8"	32'-6"
VERTICAL DOWNWARD BENDS										
11 1/4°	3'-3 5/8"	4'-10 13/16"	6'-2 3/8"	7'-6"	9'-2 3/8"	10'-6"	11'-9 5/8"	12'-9 5/8"	14'-1 3/16"	16'-8 3/8"
22 1/2°	6'-10 13/16"	9'-9 5/8"	12'-9 5/8"	15'-4 13/16"	18'-4 13/16"	21'-0"	23'-7 3/16"	26'-2 3/8"	28'-6"	33'-9 5/8"
45°	14'-4 13/16"	20'-3 5/8"	26'-7 3/16"	32'-1 3/16"	38'-0"	43'-7 3/16"	48'-11"	54'-4 13/16"	59'-8 3/8"	69'10 5/8"
90°	34'-9 5/8"	49'-2 3/8"	64'-0"	77'-8 3/8"	91'-6"	105'-0"	118'-4 7/8"	131'-2 3/8"	144'-0"	169'-0"

NOTE: FOR POLYETHYLENE WRAPPED PIPE, MULTIPLY VALUES IN TABLE BY 1.45

FOR VERTICAL DOWNWARD BENDS:

$$L_R = \frac{S.F. \times P \times AREA \times TAN\ (1/2\ BEND\ ANGLE)}{F_F}$$

FOR VERTICAL UPWARD BENDS:

$$L_R = \frac{S.F. \times P \times AREA \times TAN\ (1/2\ BEND\ ANGLE)}{F_F + \frac{1}{2} R}$$

SOURCE: DUCTILE IRON PIPE RESEARCH ASSOCIATION

NOTES:

1. SEE SPECIAL NOTES ENTITLED "OWNER REQUIREMENTS FOR WATER MAINS AND APPURTENANCES" FOR ADDITIONAL INFORMATION ON THRUST RESTRAINT REQUIREMENTS.
2. THRUST RESTRAINT USING THRUST BLOCKS AND TIE RODS ARE SHOWN ON THESE SHEETS. RESTRAINED JOINTS AND RETAINER GLANDS ARE ALSO ACCEPTABLE METHODS. THE THRUST RESTRAIN METHODS SHALL BE AS REQUIRED BY THE SYSTEM OWNER.
3. IF THE OWNER OR THE WATER SYSTEM ALLOWS A METHOD THAT RESTRAINS INDIVIDUAL JOINTS, EACH JOINT THAT FALLS WITHIN THE MINIMUM RESTRAINED LENGTH, MEASURED FROM THE CENTER OF THE FITTING, AS SHOWN ON THESE SHEETS SHALL BE RESTRAINED, AND SHALL WITHSTAND THE MAXIMUM PRESSURE APPLIED TO THE SYSTEM.
4. CLASS A CONCRETE SHALL NOT BE PLACED UNDERWATER. THE CONTRACTOR SHALL DE WATER THE EXCAVATION OR PLACE TYPE "G" CONCRETE USING APPROPRIATE UNDERWATER PLACEMENT TECHNIQUES.
5. CONCRETE FOR THRUST BLOCKS SHALL NOT BE ALLOWED TO COVER OR INTERFERE WITH JOINT OR RESTRAINT HARDWARE. PLASTIC SHEETING OR BUILDING FELT MAY BE PLACED OVER PIPE OR FITTINGS TO PREVENT CONCRETE FROM ADHERING TO SURFACES.
6. THRUST BLOCK ANCHOR RODS SHALL MEET THE REQUIREMENTS OF §709-03 OF THE STANDARD SPECIFICATIONS. ALL EMBEDDED RODS SHALL HAVE STANDARD ACI HOOKS ON EACH END, AND SHALL HAVE A MINIMUM OF 3" CONCRETE COVER IN ALL DIRECTIONS.
7. TIE RODS AND CONNECTOR HARDWARE SHALL MEET THE REQUIREMENTS OF THE FOLLOWING:
   BLACK - ASTM A307 GRADE 2
   GALVANIZED - ASTM A449 GRADE 5
   STAINLESS - ASTM A325 TYPE 3
8. A MINIMUM OF TWO TIE RODS SHALL BE USED FOR EACH INSTALLATION. THE RECOMMENDED SIZES OF TIE RODS ARE FOR TWO OR FOUR TIE ROD SYSTEMS. THE NUMBER AND SIZE OF TIE RODS USED MAY DIFFER AS LONG AS THE MIN. REQUIRED AREA IS PROVIDED, AND THE METHOD IS APPROVED BY THE ENGINEER.
9. THRUST RESTRAINT FOR SIZES OVER 24 NPS AND/OR FOR OTHER FITTINGS NOT SHOWN ON THESE SHEETS WILL BE AS SHOWN IN THE CONTRACT DOCUMENTS.
10. THRUST BLOCK SIZES AND MINIMUM RESTRAINED LENGTHS SHOWN ON THESE SHEETS ARE BASED UPON THE FOLLOWING STANDARD CONDITIONS:
    1.5 SAFETY FACTOR
    5 FT DEPTH OF COVER
    200 PSI WATER SYSTEM TEST PRESSURE
    14 PSI SOIL BEARING CAPACITY
    90 LBS\FT^3 SOIL UNIT WEIGHT
11. TO DETERMINE REQUIRED SIZES FOR DIFFERENT CONDITIONS, MULTIPLY THE DIMENSION BY A FACTOR OF THE SPECIFIC VALUE DIVIDED BY THE STANDARD VALUE.

    EXAMPLE: FOR 12 NPS 45° BEND WITH 100 PSI TEST PRESSURE:
    AREA REQUIRED=4'-7" X 2'-3" X (100/200) = 5.29 SQUARE FEET
    WIDTH = 3'-3"
    HEIGHT = 1'-7"

STATE OF NEW YORK
DEPARTMENT OF TRANSPORTATION

U.S. CUSTOMARY STANDARD SHEET

WATER MAIN
THRUST RESTRAINT DETAILS

APPROVED SEPTEMBER 19, 2008

/S/ DANIEL D'ANGELO, P.E.
DEPUTY CHIEF ENGINEER
(DESIGN)

ISSUED UNDER EB 08-036

663-03

EFFECTIVE DATE: 01/08/09

FILE NAME = IP_PWP:d0109553\663-03.dgn
DATE/TIME = 06-NOV-2008 15:05
USER = jturley

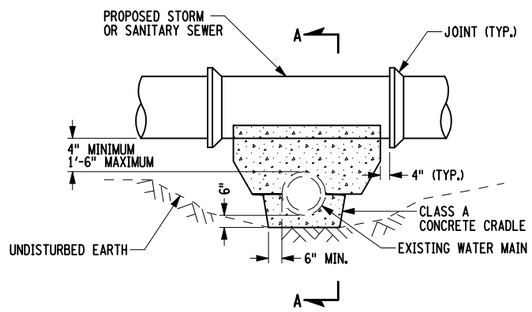

ELEVATION

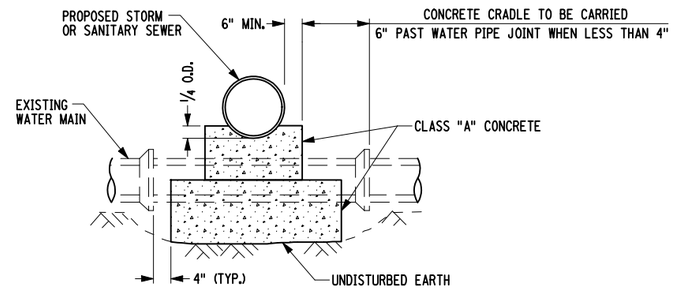

SECTION A-A

UTILITY CROSSING - VERTICAL OBSTRUCTION
LACKING REQUIRED VERTICAL OFFSET
PROPOSED STORM SEWER CROSSING WATER MAIN WITH 4" - 18" OF VERTICAL SEPARATION

NOTES:

1. SEE SPECIAL NOTES ENTITLED "OWNER REQUIREMENTS FOR WATER MAINS AND APPURTENANCES" FOR INFORMATION ON ADDITIONAL THRUST RESTRAINT REQUIREMENTS.
2. WATER MAIN RELOCATION WORK MAY BE REQUIRED WHERE PROPOSED STORM DRAINS CROSS AN EXISTING WATER MAIN. THE CONTRACTOR SHALL ESTABLISH THE DEPTH OF THE WATER MAIN AT ALL CROSSING POINTS. THE ENGINEER WILL THEN VERIFY THE EXTENT OF THE WATER MAIN RELOCATION WORK REQUIRED.
3. UNLESS OTHERWISE NOTED IN THE OWNER REQUIREMENTS, A SINGLE METHOD OF THRUST RESTRAINT SHALL BE PROVIDED AT EACH FITTING THAT CREATES A THRUST IN ACCORDANCE WITH PRESSURE PIPE THRUST RESTRAINT DETAILS.
4. THE OFFSET OF A WATER MAIN TO AVOID AN OBSTRUCTION SHALL BE ACCOMPLISHED USING A MINIMUM NUMBER AND WEIGHT OF FITTINGS.
5. ENCASEMENT OF A WATER MAIN IN A CONCRETE CRADLE DUE TO PROXIMITY OF A STORM SEWER WILL BE INSTALLED IN ACCORDANCE WITH SECTION 501, WITH THE EXCEPTION THAT BATCHING REQUIREMENTS SHALL NOT APPLY.

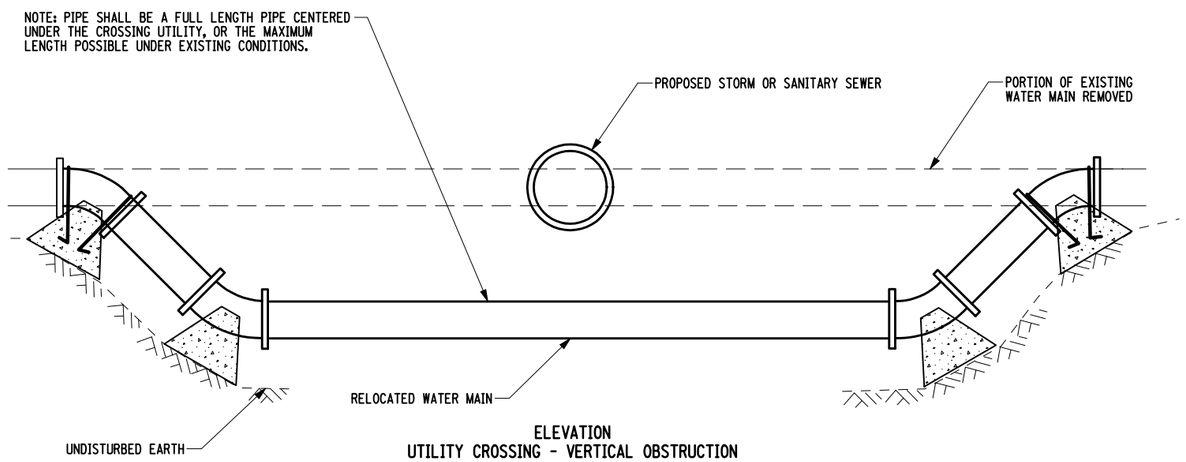

ELEVATION
UTILITY CROSSING - VERTICAL OBSTRUCTION
WITH REQUIRED VERTICAL OFFSET
NOTE: THRUST BLOCKS SHOWN, THRUST RESTRAINT MAY BE PROVIDED BY ANY SINGLE METHOD IN ACCORDANCE WITH WATER MAIN THRUST RESTRAINT DETAILS

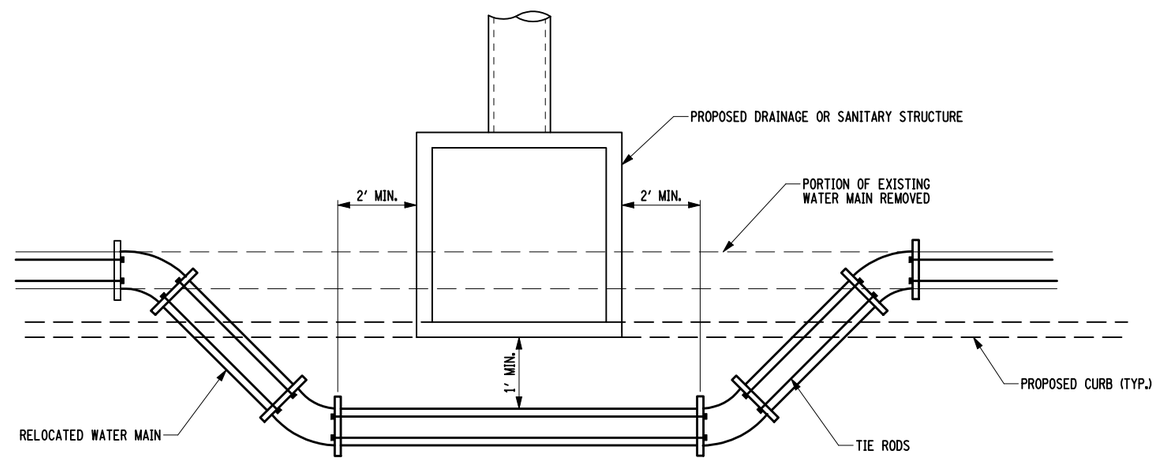

PLAN VIEW
UTILITY CROSSING - HORIZONTAL OBSTRUCTION
NOTE: TIE RODS SHOWN, THRUST RESTRAINT MAY BE PROVIDED BY ANY SINGLE METHOD IN ACCORDANCE WITH WATER MAIN THRUST RESTRAINT DETAILS

STATE OF NEW YORK
DEPARTMENT OF TRANSPORTATION

U.S. CUSTOMARY STANDARD SHEET

WATER MAIN
UTILITY CROSSING RELOCATION DETAILS

APPROVED SEPTEMBER 19, 2008	ISSUED UNDER EB 08-036
/S/ DANIEL D'ANGELO, P.E. DEPUTY CHIEF ENGINEER (DESIGN)	663-04

EFFECTIVE DATE: 01/08/09

FILE NAME = IP_PWPrd01095553\663-04.dgn
DATE/TIME = 06-NOV-2008 15:05
USER = jturley

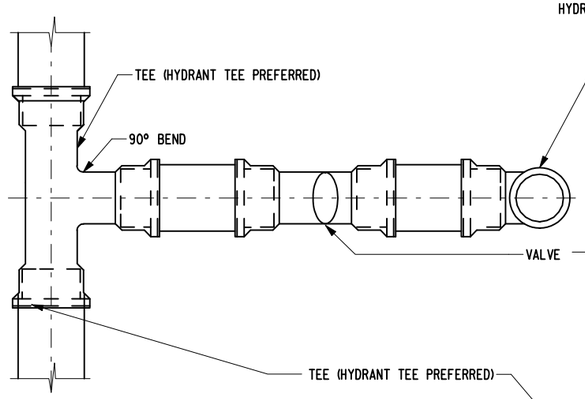

TYPICAL HYDRANT INSTALLATION
PLAN VIEW

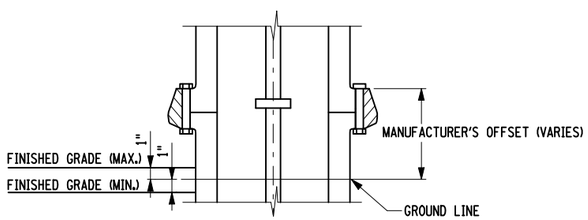

HYDRANT GROUND LINE DETAIL

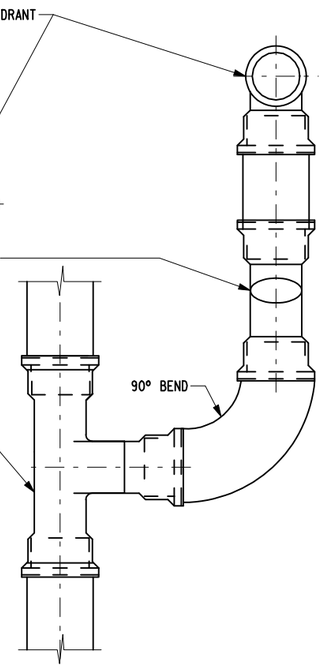

ALTERNATE HYDRANT INSTALLATION
PLAN VIEW

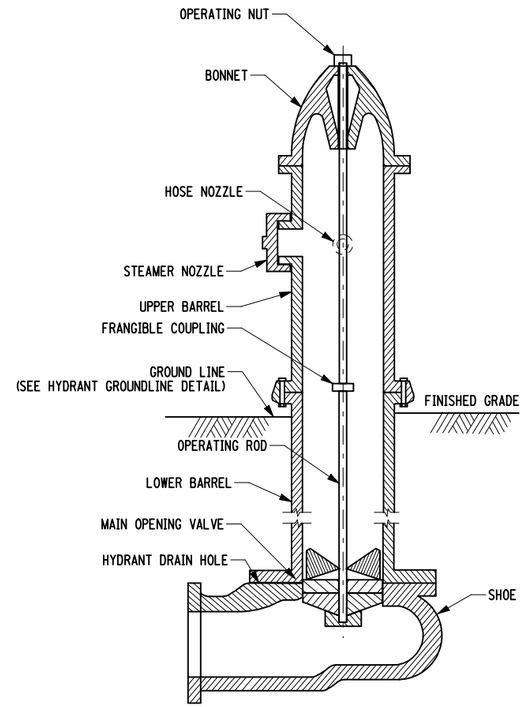

HYDRANT ASSEMBLY
CROSS SECTION
NOTE: WILL VARY WITH MANUFACTURER & MODEL

NOTES:

1. SEE SPECIAL NOTES ENTITLED "OWNER REQUIREMENTS FOR WATER AND APPURTENANCES" FOR INFORMATION ON ADDITIONAL REQUIREMENTS.
2. ALL NEW HYDRANTS SHALL BE DRY-BARREL. TRAFFIC MODELS IN ACCORDANCE WITH AWWA STANDARD C502 UNLESS SPECIFICALLY REQUIRED OTHERWISE BY THE OWNER REQUIREMENTS. THE GROUND LINE MARKED ON THE HYDRANT, OR IDENTIFIED BY THE MANUFACTURERS USING AN OFFSET FROM A KNOWN POINT ON THE HYDRANT, SHALL BE WITHIN 1" ABOVE OR BELOW FINISHED GRADE. THE HYDRANT SHALL BE INSTALLED SO THAT NO PORTION OF THE LOWER BARREL (THAT PORTION REMAINING IF THE UPPER BARREL IS BROKEN OFF) EXTENDS MORE THAN 4" ABOVE FINISHED GRADE, MEASURED OVER 5'-0" HORIZONTAL SPAN.
3. WHEN THE HYDRANT CANNOT BE PLACED IN THE DESIRED LOCATION USING THE TYPICAL HYDRANT INSTALLATION DUE TO CLOSE PROXIMITY TO THE MAIN, THE ALTERNATE HYDRANT LOCATION LAYOUT MAY BE USED.
4. MULTIPLE BARREL EXTENSIONS ARE NOT PERMITTED UNLESS THE DESIRED GRADE CANNOT BE REACHED WITH A SINGLE EXTENSIONS. IF A SMALLER EXTENSIONS IS ALREADY IN PLACE ON AN EXISTING HYDRANT, IT SHALL BE REMOVED AND REPLACE WITH A SINGLE LONGER ONE. THE REMOVED EXTENSIONS SHALL BECOME THE PROPERTY OF THE OWNER.
5. BACKFILL AROUND THE TOP OF THE LOWER BARREL SHALL BE COMPACTED TO A MINIMUM DENSITY OF 90% PROCTOR IN ACCORDANCE WITH STANDARD §203-3.15 OR A 2' X 2' IN CONCRETE COLLAR SHALL BE CAST AROUND THE BARREL IN ORDER TO PREVENT MOVEMENT OF THE SHOE - IF THE HYDRANT IS STUCK.
6. LATERALS FOR HYDRANTS USING ANCHOR PIPES SHALL BE SINGLE PIECE, UNLESS MORE THAN A FULL LENGTH OF ANCHOR PIPE IS REQUIRED. LATERALS FOR HYDRANTS USING THRUST RESTRAINT PROVIDED BY MEANS OTHER THAN AN ANCHOR PIPE SHALL BE SINGLE PIECE, UNLESS MORE THAN A FULL LENGTH (18'-0") OF PIPE IS REQUIRED.
7. NEW WATER MAINS INSTALLED PARALLEL TO STORM AND/OR SANITARY SEWER CONDUITS SHALL HAVE A MINIMUM OF 10'-0" HORIZONTAL SEPARATION (MEASURED EDGE OF PIPE TO EDGE OF PIPE) WHENEVER POSSIBLE. WHEN 10'-0" HORIZONTAL SEPARATION CANNOT BE MAINTAINED, A VERTICAL SEPARATION OF AT LEAST 1'-6" BETWEEN BOTTOM OF WATER MAIN AND TOP OF SEWER PIPE SHALL BE MAINTAINED. IF NEITHER HORIZONTAL OR VERTICAL SEPARATION CAN BE MAINTAINED, THE WATER AND THE SEWER SHALL BE CONSTRUCTED AS SHOWN ON THE CONTRACT PLANS AND APPROVED BY THE APPROPRIATE HEALTH AGENCY.
8. THE RELOCATION OF AN EXISTING HYDRANT SHALL INCLUDE THE INSTALLATION LENGTH OF ANCHOR PIPE UP TO 6'-6" LONG, INSTALLED AT ANY POINT BETWEEN THE MAIN AND THE HYDRANT.
9. THRUST RESTRAINTS SHALL BE PROVIDED AS FOR A DEAD END AND AS REQUIRED MY THE OWNERS REQUIREMENTS.
10. THE HYDRANT DRAIN HOLE SHALL BE KEPT UNOBSTRUCTED, CARE SHALL BE USED TO KEEP THRUST RESTRAINTS FROM BLOCKING DRAIN HOLE. IF THE HYDRANT DRAIN IS LOCATED WITHIN 10'-0" OF A SANITARY SEWER OR STORM DRAIN, OR IF GROUNDWATER IS FOUND WITHIN 6'-6" OF FINISHED GRADE, THE HYDRANT DRAINS SHALL BE PLUGGED.
11. HYDRANT DRAINAGE MATERIAL SHALL BE #1 OR #2 STONE PER STANDARD §703-02.
12. MATERIALS REMOVED UNDER REMOVE EXISTING HYDRANT SHALL REMAIN THE PROPERTY OF THE SYSTEM OWNER. THE CONTRACTOR SHALL NOTIFY THE OWNER A MINIMUM OF 48 HOURS PRIOR TO REMOVAL TO COORDINATE PICK-UP, OR SHALL STORE THE MATERIALS FOR PICK-UP ON-SITE A.O.B.E.
13. MATERIALS REMOVED UNDER REMOVE AND DISPOSE OF EXISTING HYDRANT SHALL BECOME THE PROPERTY OF THE CONTRACTOR AND SHALL BE PROMPTLY REMOVED FROM THE WORK SITE A.O.B.E.

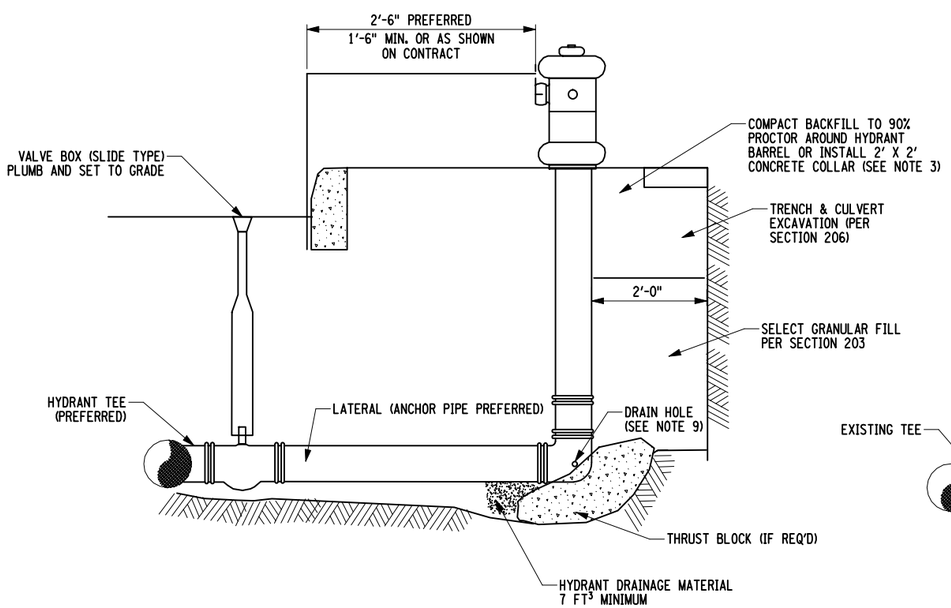

HYDRANT INSTALLATION DETAIL

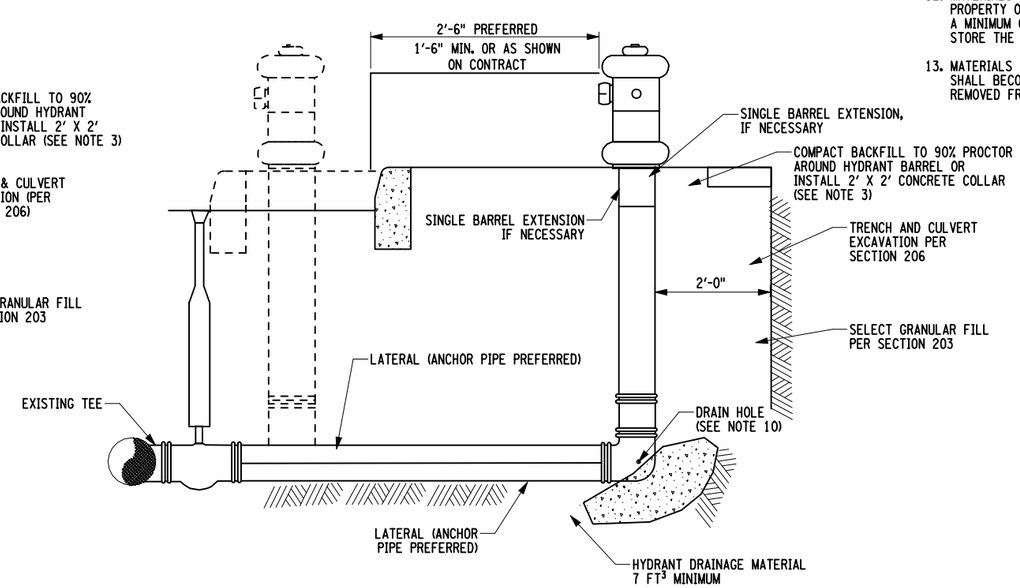

HYDRANT RELOCATION DETAIL
NOTE: IF IT BECOMES NECESSARY TO MOVE THE EXISTING VALVE, THAT WORK SHALL BE DONE UNDER RELOCATE VALVE AND VALVE BOX

STATE OF NEW YORK
DEPARTMENT OF TRANSPORTATION

U.S. CUSTOMARY STANDARD SHEET

WATER MAIN
HYDRANT AND VALVE DETAILS

APPROVED SEPTEMBER 19, 2008
/S/ DANIEL D'ANGELO, P.E.
DEPUTY CHIEF ENGINEER
(DESIGN)

ISSUED UNDER EB 08-036

663-05

EFFECTIVE DATE: 01/08/09

FILE NAME = IP_PWPrd01095553\663-05.dgn
DATE/TIME = 06-NOV-2008 15:06
USER = jturley

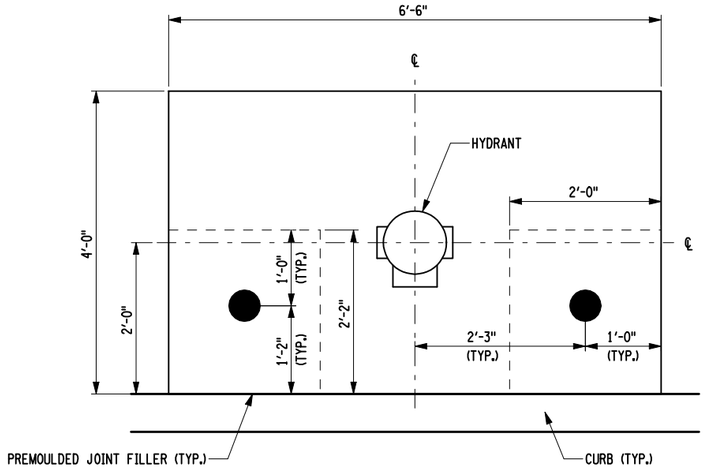

PLAN
2 FENDER LAYOUT

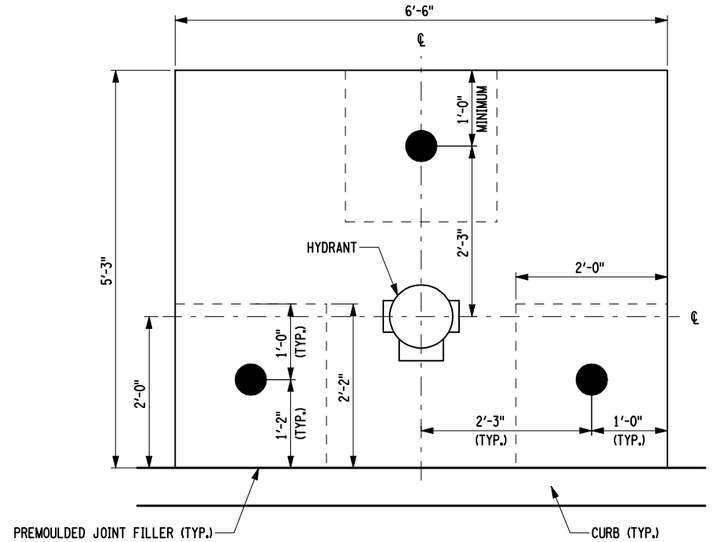

PLAN
3 FENDER LAYOUT

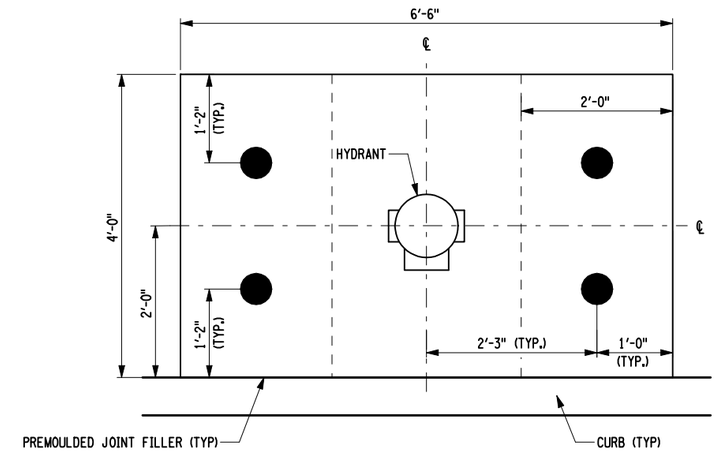

PLAN
4 FENDER LAYOUT

NOTES:

1. SEE SPECIAL NOTES ENTITLED "OWNER REQUIREMENTS FOR WATER MAINS AND APPURTENANCES" FOR INFORMATION ON ADDITIONAL REQUIREMENTS.
2. A HYDRANT FENDER SHALL BE CONSTRUCTED OF A 6'-3" LONG 5 NPS SCHEDULE 80 STEEL PIPE MEETING THE REQUIREMENTS OF ASTM A53. FENDERS SHALL BE FILLED WITH CLASS A CONCRETE MEETING THE REQUIREMENTS OF SECTION 501.
3. FENDER CAPS SHALL BE FABRICATED OF MALLEABLE IRON OR CAST IRON. CAPS SHALL BE DRILLED AND PINNED IN ORDER TO PREVENT REMOVAL.
4. FENDERS SHALL BE CLEANED AND COATED ON THE OUTSIDE WITH ONE COAT OF PRIMER MEETING THE REQUIREMENTS OF SECTION 708. THE PORTION OF FENDERS ABOVE THE GROUND SHALL BE PAINTED WITH ALUMINUM PAINT MEETING THE REQUIREMENTS OF §708-08 AND THE PORTION BELOW THE GROUND SHALL BE COVERED WITH AN ASPHALT COATING TO PREVENT CORROSION.
5. PAYMENT WILL BE BASED UPON THE NUMBER OF INDIVIDUAL FENDERS INSTALLED.
   EXAMPLE: THE PAYMENT QUANTITY FOR A THREE FENDER LAYOUT WILL BE 3 EACH.
6. COLLAR DIMENSIONS SHOWN ARE TYPICAL. DIMENSIONS MAY VARY TO MEET CONDITIONS IN THE FIELD.
7. PREMOLDED JOINT FILLER SHALL MEET THE REQUIREMENTS OF §705-07.

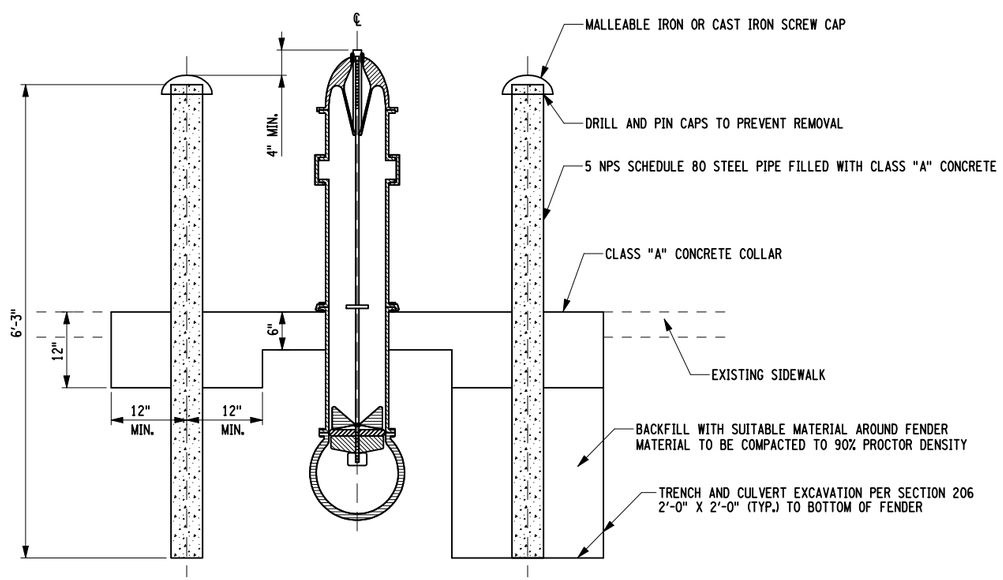

TYPICAL ELEVATION VIEW

STATE OF NEW YORK
DEPARTMENT OF TRANSPORTATION

U.S. CUSTOMARY STANDARD SHEET

WATER MAIN
HYDRANT FENDER DETAILS

APPROVED SEPTEMBER 19, 2008

/S/ DANIEL D'ANGELO, P.E.
DEPUTY CHIEF ENGINEER
(DESIGN)

ISSUED UNDER EB 08-036

663-06

EFFECTIVE DATE: 01/08/09

FILE NAME = IP_PWP:d0109553\663-06.dgn
DATE/TIME = 06-NOV-2008 15:06
USER = jturley

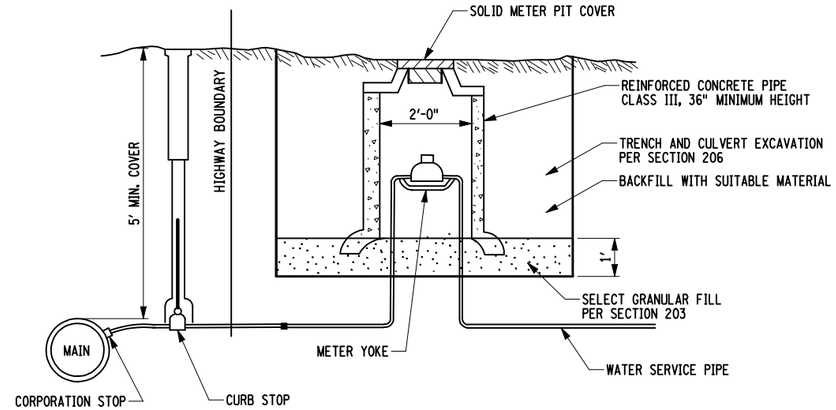

METER PIT - TYPE "B"

CROSS SECTION

NOTES:

1. WATER SERVICE TAPS ON A NEW OR EXISTING MAIN SHALL BE PLACED AT THE 2 O'CLOCK OR 10 O'CLOCK POSITION AND SHALL BE PLACED A MINIMUM OF 1FT APART ALONG THE LENGTH OF THE MAIN. NO TAPS SHALL BE PLACED WITHIN 2FT OF THE END OF A PIPE.
2. UNLESS OTHERWISE NOTED IN THE OWNER REQUIREMENTS, ALL NEW SERVICE LINES SHALL BE TYPE K COPPER IN ACCORDANCE WITH §722-06.
3. ALL FITTINGS, INCLUDING CORPORATION STOP, CURB STOP, COUPLINGS, ELBOWS, ETC SHALL BE BRASS, IN ACCORDANCE WITH §722-06 AND OWNER REQUIREMENTS.
4. CURB STOP AND CURB BOX SHALL BE PLACED WITHIN THE HIGHWAY RIGHT OF WAY AND WITHIN THE SNOW STORAGE AREA WHENEVER POSSIBLE, OR AS SHOWN ON THE CONTRACT PLANS AND IN THE OWNER REQUIREMENTS.
5. RELOCATED CURB STOP AND BOX SHALL INCLUDE NEW WATER SERVICE PIPE TO THE HIGHWAY BOUNDARY OR AS SHOWN ON THE CONTRACT PLANS AND IN THE OWNER REQUIREMENTS.
6. THE CURB BOX CAP SHALL BE OF THE PLUG TYPE WHEN PLACED IN A PAVED SURFACE, AND THE TWO HOLE TYPE WHEN PLACED IN A GRASSED OR LANDSCAPED AREA.
7. WHEN PLACED IN GRASS, THE TOP OF CURB BOX SHALL BE SET 9/16 INCH BELOW FINISHED GRADE.
8. UNLESS OTHERWISE NOTED IN THE OWNER REQUIREMENTS, METERS WILL BE SUPPLIED BY THE OWNER AT NO COST TO THE CONTRACTOR OR TO THE STATE. PIPING IS SCHEMATIC, PIPING SHALL BE INSTALLED AS REQUIRED FOR THE INDIVIDUAL INSTALLATION.

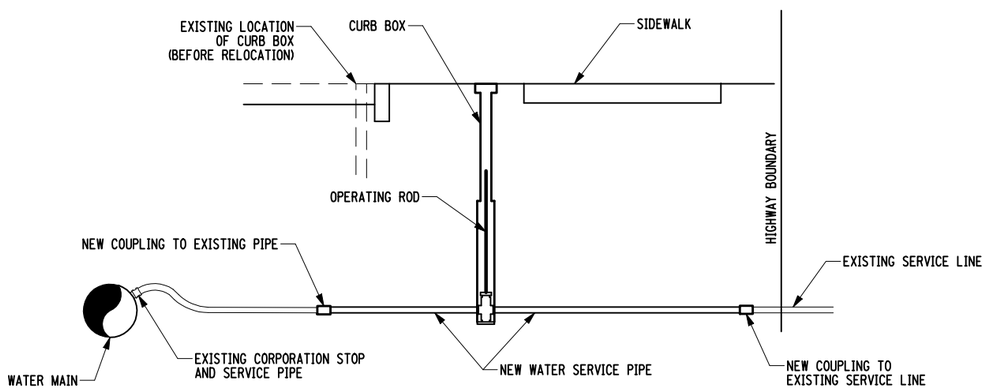

CURB STOP AND CURB BOX DETAIL

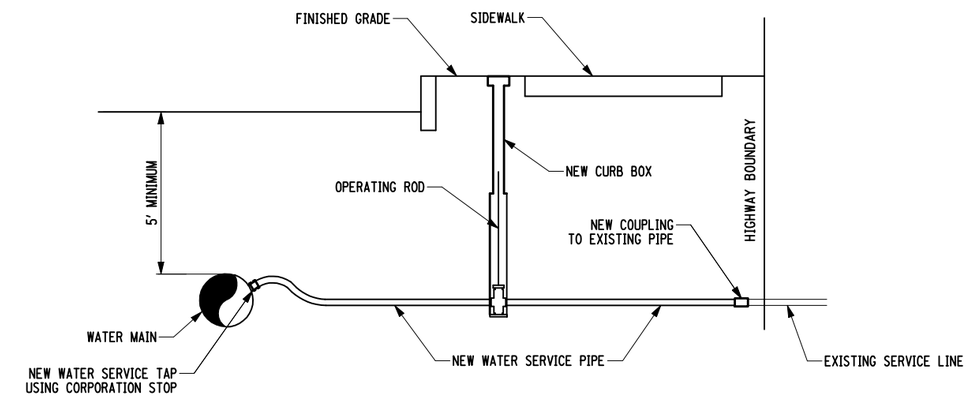

WATER SERVICE CONNECTION DETAIL

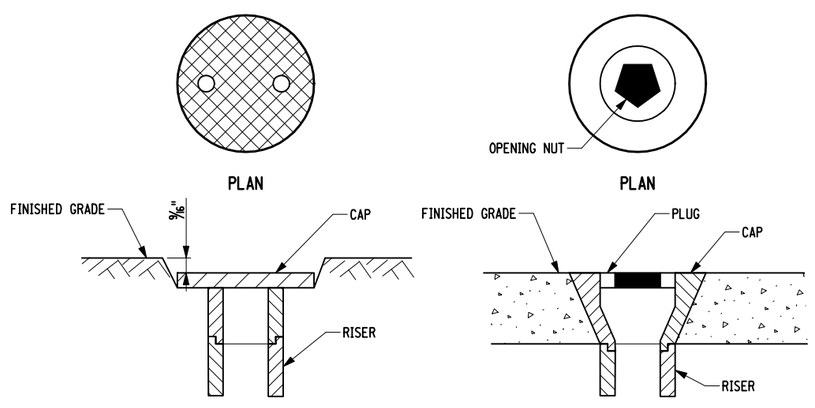

TWO-HOLE TYPE - CROSS SECTION
USED IN GRASSED OR LANDSCAPED AREAS

PLUG TYPE - CROSS SECTION
USED IN SIDEWALKS OR PAVED AREAS

CURB BOX CAPS

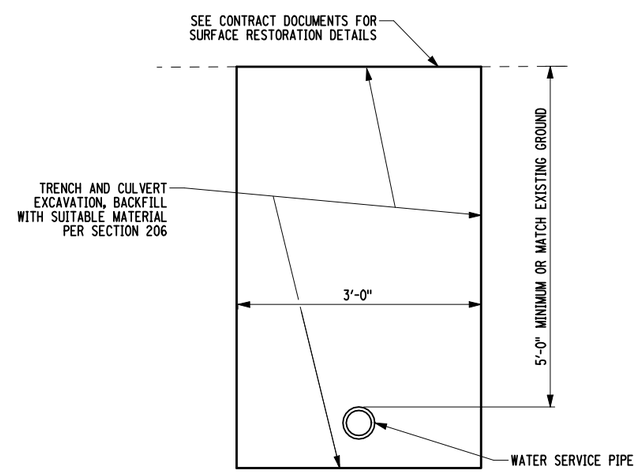

WATER SERVICE TRENCH DETAIL

STATE OF NEW YORK
DEPARTMENT OF TRANSPORTATION

U.S. CUSTOMARY STANDARD SHEET

WATER MAIN
SERVICE CONNECTION DETAIL

APPROVED SEPTEMBER 19, 2008

/S/ DANIEL D'ANGELO, P.E.
DEPUTY CHIEF ENGINEER
(DESIGN)

ISSUED UNDER EB 08-036

663-07

EFFECTIVE DATE: 01/08/09

FILE NAME = IP_PWP-d0109553\663-07.dgn
DATE/TIME = 06-NOV-2008 15:06
USER = jturley

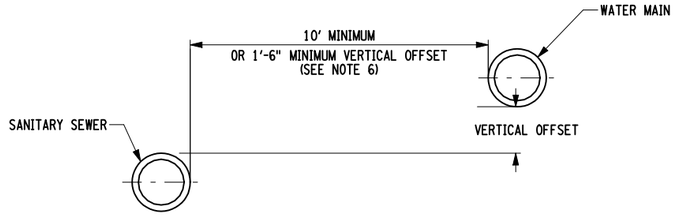

CROSS SECTION
SANITARY SEWER MAIN / WATER MAIN
PARALLEL INSTALLATION

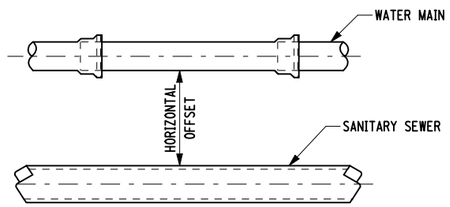

PLAN
SANITARY SEWER MAIN / WATER MAIN
PARALLEL INSTALLATION

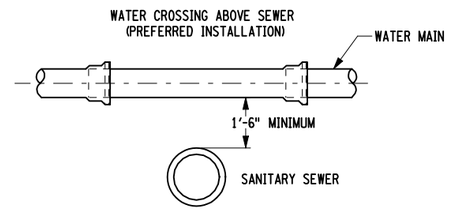

SANITARY SEWER MAIN / WATER MAIN
CROSSING

NOTES:

1. SEE SPECIAL NOTES ENTITLED "OWNER REQUIREMENTS FOR SEWER MAINS AND APPURTENANCES" FOR INFORMATION ON ADDITIONAL REQUIREMENTS. REQUIREMENTS ARE CONSISTANT WITH "10 STATE STANDARDS" AS PUBLISHED BY HEALTH EDUCATION SERVICES.
2. IT IS THE CONTRACTOR'S RESPONSIBILITY TO DETERMINE THE EXACT LOCATIONS OF EXISTING UTILITIES. THE CONTRACTOR SHALL VERIFY ELEVATIONS OF EXISTING UTILITIES TO ENSURE ADEQUATE CLEARANCE FOR THE SEWER LINE EXISTS. THE CONTRACTOR SHALL NOIFY THE ENGINEER (IN WRITING) OF CONFLICTING ELEVATIONS, ALLOWING THE ENGINEER ADEQUATE TIME TO REVISE GRADES WITHOUT NECESSITATING REMOVAL AND RECONSTRUCTION OF WORK ALREADY COMPLETED BY THE CONTRACTOR.
3. THE TOP PAYMENT LINE FOR TRENCH EXCAVATION SHALL BE PER SECTION 206.
4. BEDDING BELOW THE PIPE INVERT SHALL BE REQUIRED ONLY WHEN NOTED IN THE OWNER REQUIREMENTS OR WHEN ROCK OR UNSTABLE OR UNSUITABLE CONDITIONS ARE ENCOUNTERED.
5. IF UNSTABLE OR UNSUITABLE SOIL CONDITIONS ARE ENCOUNTERED NEAR THE INVERT ELEVATION, A MINIMUM OF 1' AND A MAXIMUM OF 2' OF MATERIAL SHALL BE EXCAVATED AND REPLACED WITH SELECT GRANULAR FILL. ADDITIONAL PAYMENT WILL BE MADE FOR MATERIAL PLACED TO TREAT UNSTABLE OR UNSUITABLE CONDITIONS.
6. NEW SANITARY SEWER MAINS INSTALLED PARALLEL TO WATER MAINS SHALL HAVE A MINIMUM OF 10' HORIZONTAL SEPARATION (MEASURED EDGE OF PIPE TO EDGE OF PIPE OR EDGE OF STRUCTURE) WHENEVER POSSIBLE. WHEN 10' HORIZONTAL SEPARATION CANNOT BE MAINTAINED A VERTICAL SEPARATION OF AT LEAST 1'-6" BETWEEN BOTTOM OF WATER MAIN AND TOP OF SANITARY SEWER PIPE SHALL BE MAINTAINED. IF NEITHER SEPARATION CAN BE MAINTAINED, THE SANITARY SEWER MAIN AND WATER PIPE SHALL BE CONSTUCTED AS SHOWN ON THE CONTRACT DOCUMENTS AS APPROVED BY THE APPROPRIATE HEALTH AGENCY.
7. BACKFILL SHALL BE INSTALLED AND COMPACTED IN ACCORDANCE WITH THE REQUIREMENTS OF SECTION 203.

EXCAVATION PAYMENT WIDTHS

NPS SIZE	TRENCH WIDTH
3	3'-0"
4	3'-0"
6	3'-0"
8	3'-0"
10	3'-0"
12	3'-0"
14	3'-6"
16	3'-6"
18	3'-6"
20	4'-0"
24	4'-0"
30	4'-6"
36	5'-0"
42	5'-6"
48	6'-0"
54	6'-6"
60	7'-0"
64	7'-6"

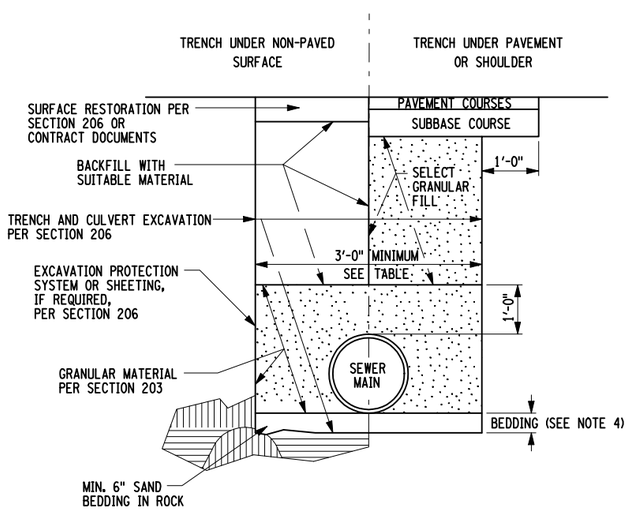

NEW OR RELOCATED
PLASTIC SANITARY SEWER MAIN
TRENCH DETAIL

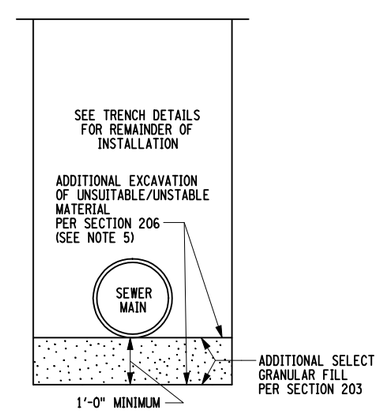

SANITARY SEWER MAIN INSTALLATION IN
UNSTABLE OR UNSUITABLE SOIL CONDITIONS

STATE OF NEW YORK
DEPARTMENT OF TRANSPORTATION

U.S. CUSTOMARY STANDARD SHEET

SANITARY SEWER MAIN PIPE
INSTALLATION DETAILS

APPROVED MAY 5 , 2010
/S/ RICHARD W. LEE, P.E.
FOR THE DEPUTY CHIEF ENGINEER (DESIGN)

ISSUED UNDER EB 10-011

664-01

EFFECTIVE DATE: 01/06/11

FILE NAME = 664-01.dgn
DATE/TIME = 11-MAY-2010 08:59
USER = jkurley